PRODUCT CATALOG

SUBMERSIBLE MOTORS SYSTEMS, DRIVES AND ACCESSORIES

franklinwater.eu

Franklin Electric

MOVING WATER IS OUR BUSINESS

Franklin Electric

INDEX

4" SUPER STAINLESS MOTOR – PSC DESIGN

STAINLESS STEEL 304

FEATURES & BENEFITS

- 4" NEMA mounting design with metric studs
- Stainless steel splined shaft
- Stator shell in 316SS
- Factory filled with Franklin's non-toxic water soluble fill solution
- Max. storage temperature -15°C - + 50°C
- Liquid lubricated radial bearings and High capacity Kingsbury type thrust bearing for 100 % maintenance free operation
- Field replaceable lead using Franklin's exclusive Water Bloc technology with extended jam nut in Stainless steel
- High efficiency electrical design for low operation costs
- Drinking water approvals
- Suitable for use in water with increased salinity

SPECIFICATION

- Ratings: 0.25 - 2,2 kW
- Frequency: 50 Hz
- Thrust load: 4 kN
- Nominal ambient temperature: 30 °C with 0.08 m/s cooling flow
- Voltage tolerance: -10 % / +6 % (50 Hz)
- Protection IP68, insulation class B
- Frequency of starts: 20 starts/ hour (with min. 3 minutes resting time)
- All motors with factory installed leads (1.50 m / 2.50 m)
- Installation orientation: Vertical / horizontal (shaft end heightened)
- Rotation counter clock wise facing shaft end (1 phase motors CW upon request)

Pollution Recovery version:

- Fluorelastomere (Viton®) rubber parts
- Special Polyuretane (PUR) lead assemblies
- 304SS (316SS Stator) graded Stainless Steel as Standard

OPTIONS

- Built in lightning arrestors
- Special lead lenghts

Hydrodynamic liquid lubricated radial bearings

100 % maintenance free operation

StatorSHIELD™ - Franklin encapsulation system

Franklin Electric encapsulated motors are equipped with hermetically-sealed windings. The Anti track stator resin mechanically supports the winding and provides fast heat dissipation.

Kingsbury type thrust bearing

High capacity 4 kN Kingsbury type thrust bearing for 100 % maintenance free operation

Pressure-equalizing diaphragm

4" SUPER STAINLESS MOTOR – PSC DESIGN

MOTOR MODEL NUMBERS 50 HZ - PSC DESIGN

P_N [kW]	U_N [V]	Digit 1 - 6	Digit 7 - 10		
			Single pack, with lead*	Motors in 40 motors packing unit	Pollution Recovery Motors (Single pack, with lead)*
0,25	220-230	254 803	6721L	6721	6723L
	230-240	254 813	6721L	6721	6723L
0,37	220-230	254 805	6721L	6721	6723L
	230-240	254 815	6721L	6721	6723L
0,55	220-230	254 807	6721L	6721	6723L
	230-240	254 817	6721L	6721	6723L
0,75	220-230	254 808	6721L	6721	6723L
	230-240	254 818	6721L	6721	6723L
1,1	220-230	254 809	6721L	6721	6723L
	230-240	254 819	6721L	6721	6723L
1,5	220-230	254 810	6721L	6721	6723L
	230-240	254 820	6721L	6721	6723L
2,2	220-230	254 811	6721L	6721	6723L
	230-240	254 821	6721L	6721	6723L

MOTOR PERFORMANCE DATA 220-230V / 50 HZ - PSC DESIGN

P_N [kW]	Thrust F [N]	U_N [V]	n_N [min^{-1}]	I_N [A]	I_A [A]	η (Eff.) [%] at % load			cos φ (Pf.) at % load			T_N [Nm]	T_A [Nm]	Capacitor μF (U_C=450V)
						50	75	100	50	75	100			
0,25	4000	220	2865	2,3	9,0	33	45	51	0,91	0,93	0,96	0,82	0,73	12,5
		230	2875	2,4	9,4	28	42	50	0,80	0,88	0,92	0,83	0,80	
0,37	4000	220	2850	3,2	12,1	36	47	54	0,86	0,92	0,97	1,21	1,07	16
		230	2860	3,3	12,6	35	46	54	0,78	0,85	0,91	1,24	1,17	
0,55	4000	220	2840	4,2	16,9	46	57	63	0,94	0,97	0,98	1,85	1,50	20
		230	2850	4,3	17,7	45	57	63	0,86	0,91	0,94	1,90	1,63	
0,75	4000	220	2825	5,7	21,7	44	54	61	0,97	0,99	0,99	2,5	2,3	35
		230	2845	5,7	22,7	41	52	59	0,92	0,96	0,98	2,5	2,5	
1,1	4000	220	2830	8,1	32,5	47	59	65	0,86	0,94	0,97	3,7	2,9	40
		230	2845	8,4	33,9	43	56	63	0,77	0,86	0,92	3,7	3,1	
1,5	4000	220	2820	10,4	39,9	52	63	68	0,90	0,95	0,98	5,1	3,6	50
		230	2830	10,7	41,7	48	59	66	0,82	0,90	0,95	5,1	3,9	
2,2	4000	220	2825	14,7	59,2	55	65	70	0,93	0,98	0,99	7,4	5,0	70
		230	2840	14,7	61,8	51	62	68	0,86	0,93	0,97	7,4	5,5	

4" SUPER STAINLESS MOTOR - PSC DESIGN

MOTOR PERFORMANCE DATA 230-240V / 50 HZ - PSC DESIGN

P_N [kW]	Thrust F [N]	U_N [V]	n_N [min^{-1}]	I_N [A]	I_A [A]	η (Eff.) [%] at % load			cos φ (Pf.) at % load			T_N [Nm]	T_A [Nm]	Capacitor µF (U_C=450V)
						50	75	100	50	75	100			
0,25	4000	230	2865	2,2	8,6	33	45	51	0,91	0,93	0,96	0,82	0,73	12,5
		240	2875	2,3	9,0	28	42	50	0,80	0,88	0,92	0,83	0,80	
0,37	4000	230	2850	3,1	11,6	36	47	54	0,86	0,92	0,97	1,21	1,07	16
		240	2860	3,2	12,1	35	46	54	0,78	0,85	0,91	1,24	1,17	
0,55	4000	230	2840	4,0	16,2	46	57	63	0,94	0,97	0,98	1,85	1,50	20
		240	2850	4,1	16,9	45	57	63	0,86	0,91	0,94	1,90	1,63	
0,75	4000	230	2825	5,5	20,8	44	54	61	0,97	0,99	0,99	2,5	2,3	35
		240	2845	5,5	21,8	41	52	59	0,92	0,96	0,98	2,5	2,5	
1,1	4000	230	2830	7,8	31,1	47	59	65	0,86	0,94	0,97	3,7	2,9	40
		240	2845	8,1	32,5	43	56	63	0,77	0,86	0,92	3,7	3,1	
1,5	4000	230	2820	10,0	38,3	52	63	68	0,90	0,95	0,98	5,1	3,6	50
		240	2830	10,2	40,0	48	59	66	0,82	0,90	0,95	5,1	3,9	
2,2	4000	230	2825	14,0	56,7	55	65	70	0,93	0,98	0,99	7,4	5,0	70
		240	2840	14,1	59,3	51	62	68	0,86	0,93	0,97	7,4	5,5	

WINDING RESISTANCE DATA 50 HZ - PSC DESIGN

P_N [kW]	U_N [V]	Stator-Ref.	Main phase [Ohm]	Start phase [Ohm]
0,25	220 - 230	326 738 ***	8,2 - 10,0	31,1 - 38,1
	230 - 240	326 800 ***	8,9 - 10,9	26,7 - 32,6
0,37	220 - 230	326 739 ***	6,7 - 8,1	21,7 - 26,5
	230 - 240	326 801 ***	7,2 - 8,8	20,8 - 25,4
0,55	220 - 230	326 740 ***	4,4 - 5,4	13,6 - 16,6
	230 - 240	326 802 ***	4,8 - 5,8	13,1 - 16,0
0,75	220 - 230	326 741 ***	3,3 - 4,1	8,1 - 9,9
	230 - 240	326 803 ***	3,7 - 4,6	7,7 - 9,4
1,1	220 - 230	326 742 ***	2,3 - 2,8	6,8 - 8,3
	230 - 240	326 804 ***	2,5 - 3,0	6,5 - 7,9
1,5	220 - 230	326 743 ***	1,8 - 2,2	4,7 - 5,7
	230 - 240	326 805 ***	1,9 - 2,4	4,4 - 5,4
2,2	220 - 230	326 744 ***	1,2 - 1,5	3,2 - 3,9
	230 - 240	326 806 ***	1,3 - 1,6	3,0 - 3,6

MOTORDESIGN, DIMENSION AND LEADS

PSC MOTORDESIGN 304SS 0,25 - 2,2 KW

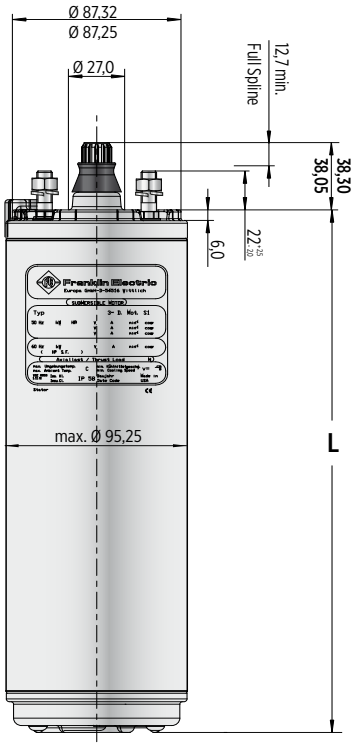

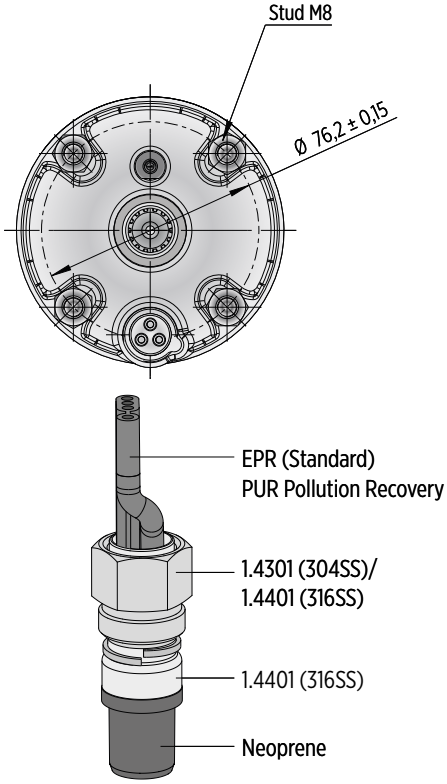

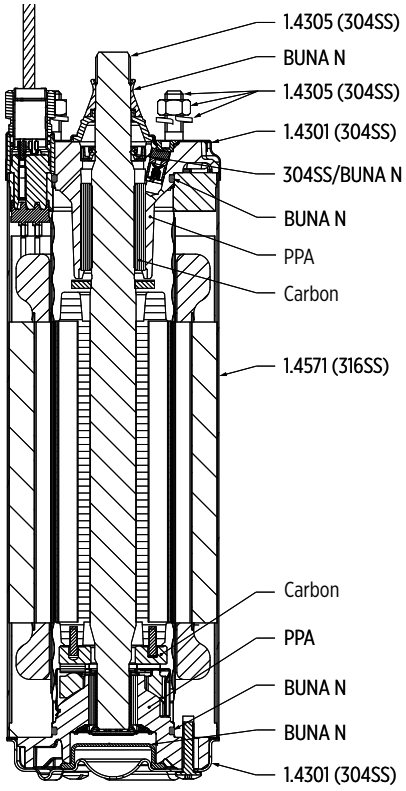

Tolerances according to NEMA MG 1-18.388

LENGTHS AND WEIGHTS - PSC DESIGN

P_N [kW]	P_N [HP]	L [mm]	M [kg]	motor with lead in single pack [mm]	motor with lead in single pack [kg]
0,25	0,33	237,2	6,55	400 x 100 x 110	7,25
0,37	0,50	251,1	7,20	400 x 100 x 110	7,9
0,55	0,75	276,2	8,35	530 x 100 x 110	9,05
0,75	1,00	297,2	9,30	530 x 100 x 110	10,0
1,10	1,50	321,2	10,45	530 x 100 x 110	11,15
1,50	2,0	353,2	11,90	796 x 100 x 110	12,6
2,20	3,0	451,2	16,65	796 x 100 x 110	17,35

PSC 1~ Motor

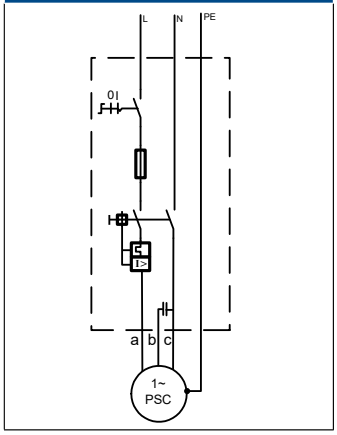

a = black | b = brown | c = grey | PE = yellow/green

MOTOR LEADS - PSC DESIGN

PSC motor leads 0,25 - 2,2 kW			
Ø [mm²]	B [mm]	B1 [mm]	H [mm]
3X1,5 + 1G1,5	16,8	10,7	5,0

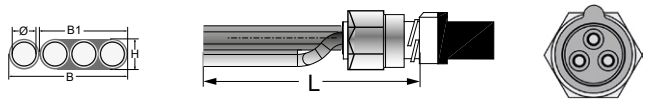

L [m]	Model numbers 304SS	Model numbers 316SS
1,5	310 113 401	310 113 501
2,5	310 113 402	310 113 502
5	310 113 405	310 113 505
10	310 113 410	310 113 510
15	310 113 415	310 113 515
20	310 113 420	310 113 520
30	310 113 430	310 113 530
40	310 113 440	310 113 540
50	310 113 450	310 113 550

MOTOR PART DESCRIPTION

MOTOR DESIGN 0.25 - 2,2 KW

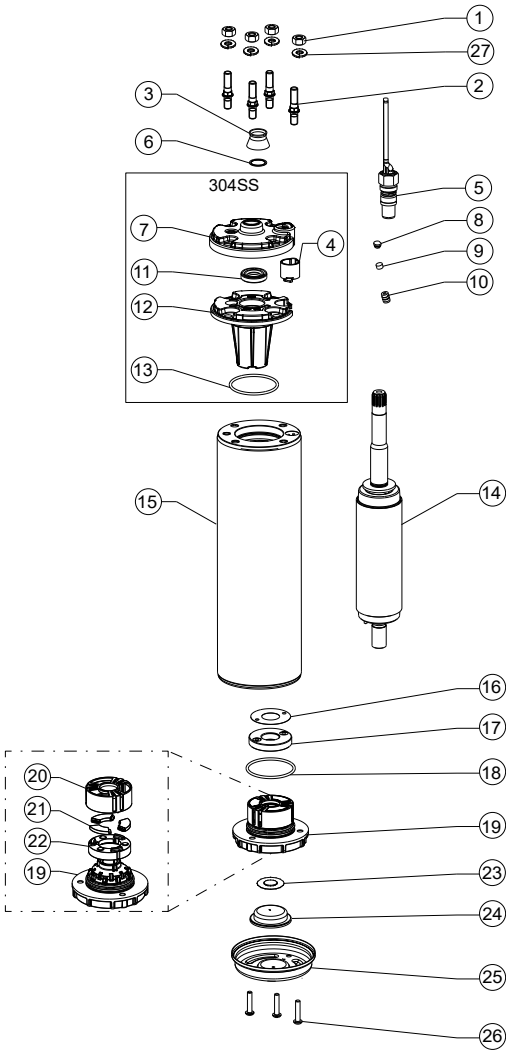

Pos.	Part Description	Qty.	Part No.
1	Nut	4	Kit C
2	Stud	4	Kit C
3	Protector, Spline	1	Kit B
4	Connector boss	1	151 820 103
5	Motor Lead	1	Page 7
6	Washer	1	Kit B
7	Top Endbell, Cover 304SS	1	150 262 151
8	Filter plug	1	Kit
9	Filter	1	Kit
10	Valve	1	Kit
11	Shaft Seal	1	Kit B
12	Top Endbell	1	KIt
13	O-Ring	1	Kit B
14	Rotor	1	Page 9
15	Stator	1	Page 9
16	Level washer	1	Kit A2
17	Thrust disk assy	1	Kit A2
18	O-Ring	1	Kit B / Kit A2
19	Bottom Endbell	1	Kit A2
20	Bearing cage	1	Kit A2
21	Segments	3	Kit A2
22	Gasket	1	Kit A2
23	Diaphragm washer	1	151 314 101 / Kit A2
24	Diaphragm	1	Kit B / KitA2
25	Bottom Endbell Cover 304SS	1	156 414 201 / Kit A2
26	Screw, Cover	3	Kit C
27	Lock washer	4	Kit C

MOTOR SPARE PARTS

SPARE PARTS KITS

P_N [kW]	0.25 - 2,2 kW		
Kit A1	Top Endbell 304SS	incl. pos. 4, 7, 8, 9, 10, 11 , 12, 13	308 462 902
	Top Endbell 316SS*		308 462 952
Kit A2	Bottom Endbell 304SS incl. Thrust Bearing Kit 4000N	incl. pos. 16 - 22	308 464 911
Kit B	Seal Kit Standard 304SS	incl. pos. 3, 6, 8, 9, 11, 13, 18, 23, 24	308 650 201
	Seal Kit Pollution Recovery 304SS		308 650 202
Kit C	Fastener Kit 304SS	incl. pos. 1, 2, 26, 27	308 656 202

SPARE PARTS PSC DESIGN - STATOR AND ROTOR 50HZ 0.25 - 2,2 KW

P_N [kW]	U_N [V]	Model no. stator 304SS	Model no. rotor 304SS
0,25	220 / 230	305 491 801	178 165 901K
	230 / 240	305 491 821	
0,37	220 / 230	305 491 802	178 165 902K
	230 / 240	305 491 822	
0,55	220 / 230	305 491 803	178 165 903K
	230 / 240	305 491 823	
0,75	220 / 230	305 491 804	178 165 904K
	230 / 240	305 491 824	
1,1	220 / 230	305 491 805	178 165 905K
	230 / 240	305 491 825	
1,5	220 / 230	305 491 806	178 165 906K
	230 / 240	305 491 826	
2,2	220 / 230	305 491 807	178 165 907K
	230 / 240	305 491 827	

4" SUPER STAINLESS MOTOR – 2WIRE DESIGN

STAINLESS STEEL 304

FEATURES & BENEFITS

- 4" NEMA mounting design with metric studs
- Stainless steel splined shaft
- Stator shell in 316SS
- Factory filled with Franklin's non-toxic water soluble fill solution
- Max. storage temperature -15°C - + 50°C
- Liquid lubricated radial bearings and High capacity Kingsbury type thrust bearing for 100 % maintenance free operation
- Field replaceable lead using Franklin's exclusive Water Bloc technology with extended jam nut in Stainless steel
- High efficiency electrical design for low operation costs
- Drinking water approvals
- Suitable for use in water with increased salinity
- Internal Automatic reset overload
- Built-in surge arrestors

SPECIFICATION

- Ratings: 0.37 - 1.1 kW
- Frequency: 50 Hz
- Thrust load: 4 kN
- Nominal ambient temperature: 30 °C with 0.08 m/s cooling flow
- Voltage tolerance: -10 % / +6 % (50 Hz)
- Protection IP68, insulation class B
- Frequency of starts: 20 starts/ hour (with min. 3 minutes resting time)
- All motors with factory installed leads (1.50 m / 2.50 m)
- Special lead length up to 50 m,
- Installation orientation: Vertical / horizontal (shaft end heightened)
- Rotation counter clock wise facing shaft end (1 phase motors CW upon request)

Pollution Recovery version:

- Fluorelastomere (Viton®) rubber parts
- Special Polyuretane (PUR) lead assemblies
- 304SS (316SS Stator) graded Stainless Steel as Standard

OPTIONS

- Built in lightning arrestors
- Special lead lengths

Hydrodynamic liquid lubricated radial bearings

100 % maintenance free operation

StatorSHIELD™ – Franklin encapsulation system

Franklin Electric encapsulated motors are equipped with hermetically-sealed windings. The Anti track stator resin mechanically supports the winding and provides fast heat dissipation.

Kingsbury type thrust bearing

High capacity 4 kN Kingsbury type thrust bearing for 100 % maintenance free operation

Pressure-equalizing diaphragm

2-WIRE MOTOR DESIGN FUNCTION DESCRIPTION

BIAC Switch Operation/2-Wire Motor Solid State Controls

Power-On: When power is applied to the motor the bi-metal switch contacts are closed so that the TRIAC is conducting. This allows current to pass to the start winding, thus starting the motor.
The BIAC switch responds to voltage from a sensor coil located inside the motor. This sensor coil voltage is proportional to motor speed (RPM).
As speed increases, the increased voltage in the sensor coil generates heat in the bi-metal, causing it to open the start winding circuit. This cuts the starting winding current and the motor continues to run on the main winding only .
Power-off: Approximately 5 seconds after power is cut from the motor, the bi-metal strip cools sufficiently to return into its NC position, and the motor is ready for the next start cycle. If during operation, the motor speed drops for some reason, the lowered voltage in the sensor coil allows the bi-metal contacts to re-close, supplying start winding current to bring the motor back to operation speed.

Reverse Impact Torque:

This unique torque reversing feature will minimize the problems of polluted environments. In a locked rotor condition, the BIAC switch will supply full start winding current for approximately one second. Then the switch begins to open and close rapidly. This action chops the start winding current, switching it between leading and lagging the run winding current. This produces impact torque in both forward and reverse directions.
This reverse impact torque will literally shake and loosen many obstructions. Once cleared, the motor will run in proper rotation.

Extreme Fast Cycling:

(Due to Water - Logged Tank)
The BIAC starting switch will reset within approximately 5 seconds after the motor is stopped. If an attempt is made to restart the motor before the starting switch has reset, the motor may not start; however, there will be current flow through the main winding until the overload protector interrupts the circuit. The reset time for the protector is longer than the reset of the starting switch. So, the start winding switch will have closed and the motor will operate. The repeated on-off cycle will continue until the overload will trip again.
When a severely water – logged condition does occur, the user will be alerted to the problem during the off time (overload reset time), since the pressure will drop dramatically. When a water – logged tank condition is detected, the condition should be corrected to prevent nuisance tripping of the overload protector.

Bound Pump (sand-locked):

When the motor is not free to turn, as with a sand-locked pump, the BIAC switch creates a “reverse impact torque “ as described above. This is a unique feature, particularly interesting in sandy environments or applications where long stand-still periods are to be expected (seasonal usage of water).

4" SUPER STAINLESS MOTOR – 2-WIRE DESIGN

MOTOR MODEL NUMBERS 50 HZ - 2-WIRE DESIGN

P_N [kW]	U_N [V]	Digit 1 - 6	Digit 7 - 10	
			Single pack, with lead*	Motors in 40 motors packing unit
0,37	220-230	244 755	6721L	6721
0,55	220-230	244 757	6721L	6721
0,75	220-230	244 758	6721L	6721
1,1	220-230	244 759	6721L	6721

* lead lengths motors: "L": 1.50 m preassembled cable

MOTOR PERFORMANCE DATA 50 HZ - 2-WIRE DESIGN

P_N [kW]	Thrust F [N]	U_N [V]	n_N [min^{-1}]	I_N [A]	I_A [A]	η (Eff.) [%] at % load			cos φ (Pf.) at % load			T_N [Nm]	T_A [Nm]
						50	75	100	50	75	100		
0,37	4000	220	2875	4,1	24,4	48	55	57	0,57	0,68	0,76	1,24	1,18
		230	2890	4,1	25,5	47	54	57	0,53	0,64	0,73	1,23	1,29
0,55	4000	220	2870	5,7	35,0	50	57	59	0,55	0,67	0,77	1,85	1,7
		230	2890	5,8	36,6	47	55	59	0,51	0,63	0,73	1,85	1,9
0,75	4000	220	2875	7,2	46,6	54	61	62	0,57	0,69	0,78	2,5	2,1
		230	2890	7,3	48,7	51	59	61	0,53	0,65	0,75	2,5	2,3
1,10	4000	220	2880	10,6	57,9	56	62	63	0,56	0,68	0,77	3,7	2,7
		230	2895	10,8	59,7	52	60	63	0,51	0,63	0,73	3,7	2,9

WINDING RESISTANCE DATA 50 HZ 220-230V - 2-WIRE DESIGN

P_N [kW]	U_N [V]	Stator-Ref.	Main phase [Ohm]
0,37	220 - 230	326 821 ***	7,2 - 8,8
0,55	220 - 230	326 822 ***	5,0 - 6,1
0,75	220 - 230	326 823 ***	3,6 - 4,4
1,10	220 - 230	326 823 ***	2,3 - 2,8

MOTOR DESIGN AND DIMENSIONS

MOTORDESIGN 304SS 0,37 - 1,1 KW

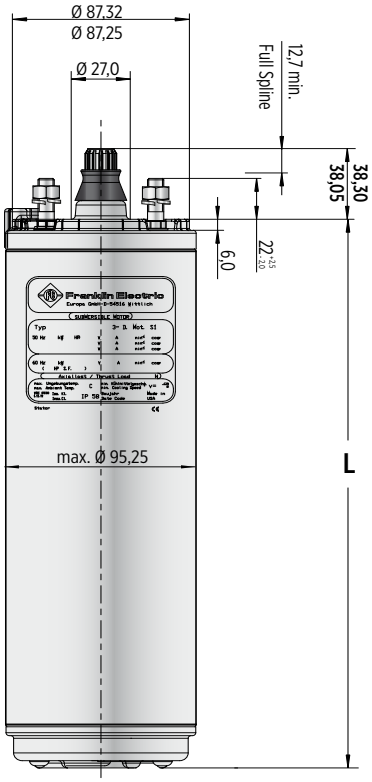

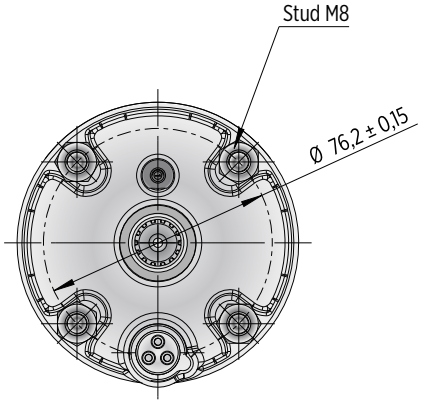

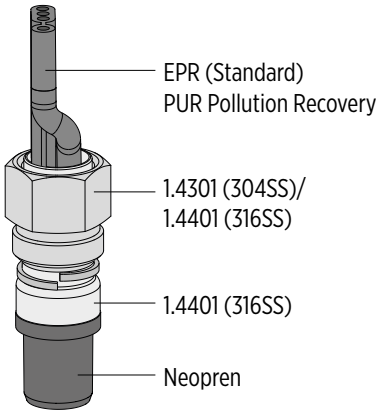

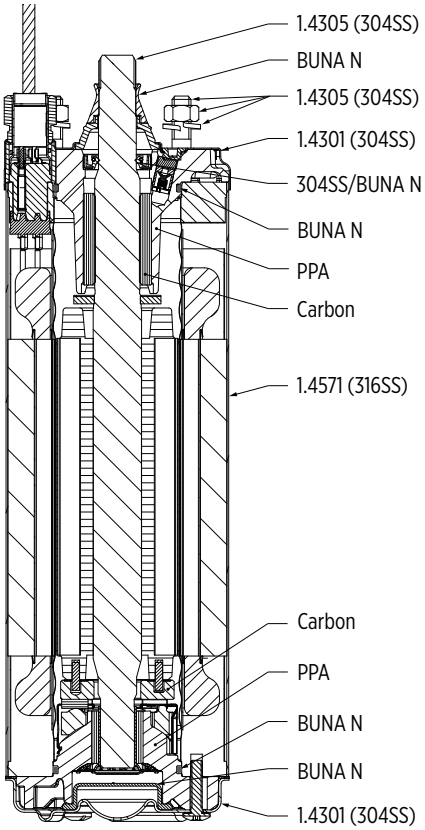

Toleranzen laut NEMA MG 1-18.388

LENGTHS AND WEIGHTS - 2-WIRE DESIGN

P_N		L [mm]	M [kg]	motor with lead in single pack	
[kW]	[HP]			[mm]	[kg]
0,37	0,50	228,2	6,7	400 x 100 x 110	7,1
0,55	0,75	248,2	7,6	400 x 100 x 110	7,9
0,75	1,00	282,6	8,8	530 x 100 x 110	9,1
1,10	1,50	338,6	11,3	530 x 100 x 110	11,6

2-wire 1~ Motor

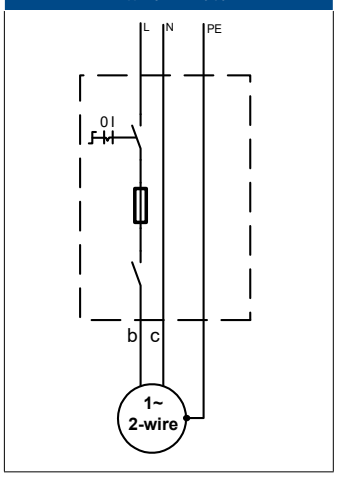

a = black | b = brown | c = grey | PE = yellow/green

MOTOR LEADS 2-WIRE

2-wire motor leads 0.37 - 1.1 kW		
Ø [mm²]	B [mm]	H [mm]
3X1,5	10,7 ± 0,3	5,0 ± 0,3

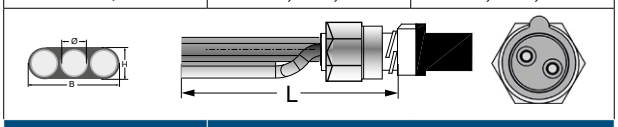

L [m]	Model numbers 304SS
1,5	310 134 401
2,5	310 134 402
5	310 134 405
10	310 134 410
15	310 134 415
20	310 134 420
30	310 134 430

MOTOR PART DESCRIPTION

MOTOR DESIGN 0.37 - 1.1 KW

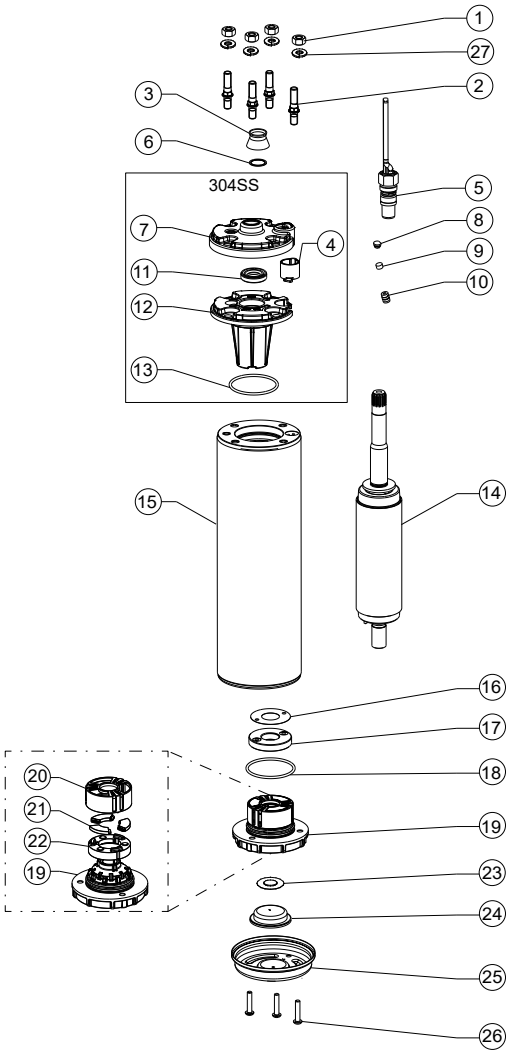

Pos.	Part Description	Qty.	Part No.
1	Nut	4	Kit C
2	Stud	4	Kit C
3	Protector, Spline	1	Kit B
4	Connector boss	1	151 820 103
5	Motor Lead	1	Page 13
6	Washer	1	Kit B
7	Top Endbell, Cover 304SS	1	150 262 151
8	Filter plug	1	Kit
9	Filter	1	Kit
10	Valve	1	Kit
11	Shaft Seal	1	Kit B
12	Top Endbell	1	KIt
13	O-Ring	1	Kit B
14	Rotor	1	Page 14
15	Stator	1	Page 14
16	Level washer	1	Kit A2
17	Thrust disk assy	1	Kit A2
18	O-Ring	1	Kit B / Kit A2
19	Bottom Endbell	1	Kit A2
20	Bearing cage	1	Kit A2
21	Segments	3	Kit A2
22	Gasket	1	Kit A2
23	Diaphragm washer	1	151 314 101 / Kit A2
24	Diaphragm	1	Kit B / KitA2
25	Bottom Endbell Cover 304SS	1	156 414 201 / Kit A2
26	Screw, Cover	3	Kit C
27	Lock washer	4	Kit C

SPARE PARTS KITS

P_N [kW]	0.25 - 3.0 kW		
Kit A1	Top Endbell 304SS	incl. pos. 4, 7, 8, 9, 10, 11 , 12, 13	308 462 902
Kit A2	Bottom Endbell 304SS incl. Thrust Bearing Kit 4000N	incl. pos. 16 - 22	308 464 911
Kit B	Seal Kit Standard 304SS	incl. pos. 3, 6, 8, 9, 11, 13, 18, 23, 24	308 650 201
	Seal Kit Pollution Recovery 304SS		308 650 202
Kit C	Fastener Kit 304SS	incl. pos. 1, 2, 26, 27	308 656 202

SPARE PARTS 2-WIRE DESIGN - STATOR AND ROTOR 0.37 - 1.1 KW

P_N [kW]	U_N [V]	Model no. stator 304SS	Model no. rotor 304SS
0,37	220 / 230	305 491 881	178 164 902K
0,55	220 / 230	305 491 882	178 164 903K
0,75	220 / 230	305 491 883	178 164 905K
1,1	220 / 230	305 491 884	178 164 908K

4" SUPER STAINLESS MOTOR – 3-WIRE DESIGN

OPTIONAL

STAINLESS STEEL 304 | STAINLESS STEEL 316

FEATURES & BENEFITS

- 4" NEMA mounting design with metric studs
- Stainless steel splined shaft
- Stator shell in 316SS
- Factory filled with Franklin's FES93 water soluble fill solution
- Max. storage temperature -15°C - + 50°C
- Liquid lubricated radial bearings and High capacity Kingsbury type thrust bearing for 100 % maintenance free operation
- Field replaceable lead using Franklin's exclusive Water Bloc technology with extended jam nut in Stainless steel
- optional Franklin Electric 3-wire control boxes for maximum system performance, protection and warranty
- High efficiency electrical design for low operation costs
- ideally be combined with FE 3-wire control boxes for maximum system performance, protection and warranty
- Drinking water approvals
- Suitable for use in water with increased salinity

Pollution Recovery version:

- Fluorelastomere (Viton®) rubber parts
- Special Polyuretane (PUR) lead assemblies
- 304SS (316SS Stator) graded Stainless Steel as Standard

SPECIFICATION

- Ratings: 0.25 - 2.2 kW
- Voltage rating: 1~ - 220-230 V / 50 Hz, 230 V / 60 Hz
- Thrust load: 4 kN
- Nominal ambient temperature: 30 °C with 0.08 m/s cooling flow
- Voltage tolerance: -10 % / +6 % (50 Hz), +/- 10% (60 Hz)
- Protection IP68, insulation class B
- Frequency of starts: 20 starts/ hour (with min. 3 minutes resting time)
- All motors with factory installed leads (1.50 m / 2.50 m)
- Installation orientation: Vertical / horizontal (shaft end heightened)
- Rotation counter clock wise facing shaft end (1 phase motors CW upon request)

OPTIONS

- Built in lightning arrestors
- 316SS material design
- Special lead lenghts

Hydrodynamic liquid lubricated radial bearings

100 % maintenance free operation

StatorSHIELD™ - Franklin encapsulation system

Franklin Electric encapsulated motors are equipped with hermetically-sealed windings. The Anti track stator resin mechanically supports the winding and provides fast heat dissipation.

Kingsbury type thrust bearing

High capacity 4 kN Kingsbury type thrust bearing for 100 % maintenance free operation

Pressure-equalizing diaphragm

4" SUPER STAINLESS MOTOR – 3-WIRE DESIGN

MOTOR MODEL NUMBERS 50 HZ - 3-WIRE DESIGN

P_N [kW]	U_N [V]	Digit 1 - 6	Digit 7 - 10							
			304SS Standard		304SS Pollution Recovery		316SS Standard		316SS Pollution Recovery	
			Single pack, with lead*	Motors in 40 motors packing unit	Single pack , with lead*	Motors in 40 motors packing unit	Single pack, with lead*	Motors in 40 motors packing unit	Single pack, with lead*	Motors in 40 motors packing unit
0,25	220-230	214 753	6721L	6721	6723L	6723	6821L	6821	6823L	6823
0,37	220-230	214 755	6721L	6721	6723L	6723	6821L	6821	6823L	6823
0,55	220-230	214 757	6721L	6721	6723L	6723	6821L	6821	6823L	6823
0,75	220-230	214 758	6721L	6721	6723L	6723	6821L	6821	6823L	6823
1,1	220-230	224 750	6721L	6721	6723L	6723	6821L	6821	6823L	6823
1,5	220-230	224 751	6721L	6721	6723L	6723	6821L	6821	6823L	6823
2,2	220-230	224 752	6721L	6721	6723L	6723	6821L	6821	6823L	6823

* lead lengths motors: „L“: up to 1.5 kW with 1.50 m preassembled cable, starting at 2.2 kW with 2.50 m pre-mounted cable

MOTOR MODEL NUMBERS 60 HZ - 3-WIRE DESIGN

P_N [kW]	P_{Max} [kW]	U_N [V]	Digit 1 - 6	Digit 7 - 10							
				304SS Standard		304SS Pollution Recovery		316SS Standard		316SS Pollution Recovery	
				Single pack, with lead*	Motors in 40 motors packing unit	Single pack , with lead*	Motors in 40 motors packing unit	Single pack, with lead*	Motors in 40 motors packing unit	Single pack, with lead*	Motors in 40 motors packing unit
0,25	0,33	230	214 70*	6721L	6721	6723L	6723	6821L	6821	6823L	6823
0,37	0,59	230	214 705	6721L	6721	6723L	6723	6821L	6821	6823L	6823
0,55	0,83	230	214 707	6721L	6721	6723L	6723	6821L	6821	6823L	6823
0,75	1	230	214 708	6721L	6721	6723L	6723	6821L	6821	6823L	6823
1,1	1,4	230	224 700	6721L	6721	6723L	6723	6821L	6821	6823L	6823
1,5	1,8	230	224 701	6721L	6721	6723L	6723	6821L	6821	6823L	6823
2,2	2,5	230	224 702	6721L	6721	6723L	6723	6821L	6821	6823L	6823

* lead lengths motors: „L“: up to 1.5 kW with 1.50 m preassembled cable, starting at 2.2 kW with 2.50 m pre-mounted cable

MOTOR PERFORMANCE DATA 50 HZ - 3-WIRE DESIGN

P_N [kW]	Thrust F [N]	U_N [V]	n_N [min-1]	I_N [A]	I_A [A]	η (Eff.) [%] at % load			cos φ (Pf.) at % load			T_N [Nm]	T_A [Nm]
						50	75	100	50	75	100		
0,25	4000	220	2850	2,8	9,3	43	50	53	0,61	0,70	0,78	0,83	1,45
		230	2870	2,8	9,7	42	50	53	0,58	0,67	0,75	0,83	1,65
0,37	4000	220	2855	3,9	13,1	48	55	56	0,58	0,69	0,77	1,23	1,90
		230	2870	4,0	13,7	46	53	56	0,55	0,65	0,74	1,23	2,05
0,55	4000	220	2860	5,9	20,6	46	53	56	0,58	0,69	0,77	1,84	3,0
		230	2880	5,9	21,6	45	53	56	0,53	0,64	0,73	1,82	3,2
0,75	4000	220	2850	7,3	26,6	53	59	60	0,59	0,71	0,79	2,5	3,8
		230	2870	7,3	27,8	51	58	61	0,55	0,67	0,76	2,5	4,2
1,1	4000	220	2875	8,6	41,3	63	68	69	0,69	0,80	0,87	3,7	6,9
		230	2885	8,6	41,2	60	67	68	0,65	0,76	0,84	3,7	6,8
1,5	4000	220	2860	10,6	55,4	66	71	71	0,75	0,85	0,91	5,0	9,6
		230	2875	10,4	53,3	64	70	71	0,69	0,81	0,88	4,9	9,5
2,2	4000	220	2875	15,2	71,2	67	73	74	0,76	0,86	0,91	7,3	13,8
		230	2885	15,3	74,5	63	70	73	0,69	0,80	0,88	7,3	15,0

MOTOR PERFORMANCE DATA 60 HZ - 3-WIRE DESIGN

P_N [kW]	P_{MAX} [kW]	Thrust F [N]	U_N [V]	n_N [min-1]	I_N [A]	I_A [A]	η (Eff.) [%] at % load			cos φ (Pf.) at % load			T_N [Nm]	T_A [Nm]
							50	75	100	50	75	100		
0,25	0,33	4000												
0,37	0,59	4000	230	3470	5,6	21,6	53	59	62	0,64	0,69	0,78	1,0	2,7
0,55	0,83	4000	230	3470	7,6	30,4	54	60	62	0,59	0,71	0,79	1,5	3,7
0,75	1	4000	230	3470	9,2	37,0	56	62	64	0,60	0,72	0,80	2,0	4,9
1,1	1,4	4000	230	3460	10,2	46	60	67	70	0,75	0,83	0,88	3,9	5,5
1,5	1,8	4000	230	3425	12,2	51	66	71	72	0,82	0,89	0,92	5,0	5,6
2,2	2,5	4000	230	3440	15,1	68	66	73	75	0,98	0,98	0,98	7,0	11,7

WINDING RESISTANCE DATA 50 HZ 220-230V - 3-WIRE DESIGN

P_N [kW]	U_N [V]	Stator-Ref.	Main phase [Ohm]	Start phase [Ohm]
0,25	220 / 230	326 807 ***	10,6 - 13,0	38,3 - 46,8
0,37	220 / 230	326 808 948	7,3 - 8,9	23,9 - 29,3
0,55	220 / 230	326 809 948	4,8 - 5,8	18,5 - 22,7
0,75	220 / 230	326 810 948	3,5 - 4,3	14,8 - 18,0
1,10	220 / 230	326 811 948	2,6 - 3,2	6,9 - 8,4
1,50	220 / 230	326 812 948	2,0 - 2,4	5,3 - 6,4
2,20	220 / 230	326 813 948	1,3 - 1,6	3,8 - 4,6

WINDING RESISTANCE DATA 60 HZ 230V - 3-WIRE DESIGN

P_N [kW]	P_{MAX} [kW]	U_N [V]	Stator-Ref.	Main phase [Ohm]	Start phase [Ohm]
0,25	0,33	230			
0,37	0,59	230	326 892 ***	4,5 - 5,5	14,4 - 17,6
0,55	0,83	230	326 893	3,3 - 4,0	10,7 - 13,1
0,75	1	230	326 894	2,6 - 3,1	8,7 - 10,7
1,10	1,4	230	326 895	2,0 - 2,5	6,8 - 8,3
1,50	1,8	230	326 896	1,7 - 2,1	5,9 - 7,2
2,20	2,5	230	326 897	1,3 - 1,6	3,5 - 4,3

MOTOR DESIGN AND DIMENSIONS

MOTORDESIGN 304SS 4000N 0,25 - 2,2 KW

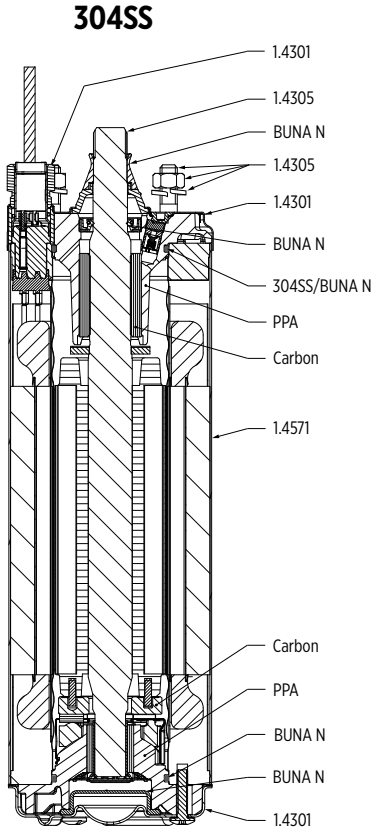

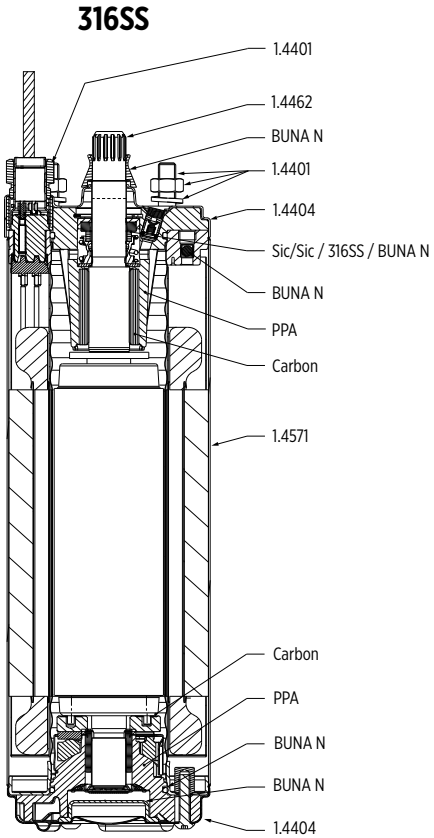

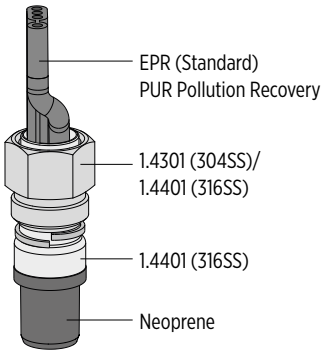

LENGTHS AND WEIGHTS - 3-WIRE DESIGN

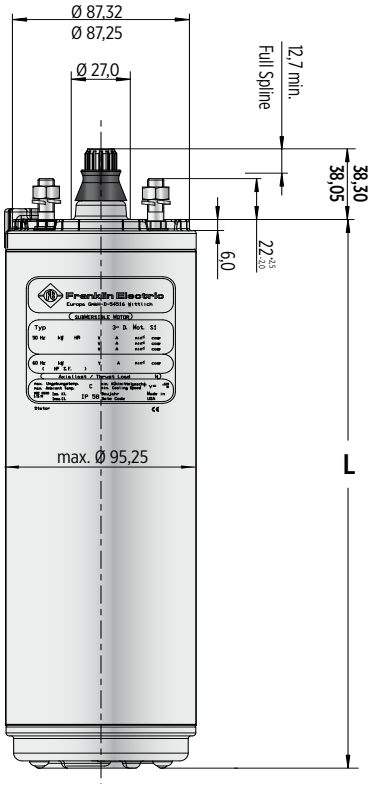

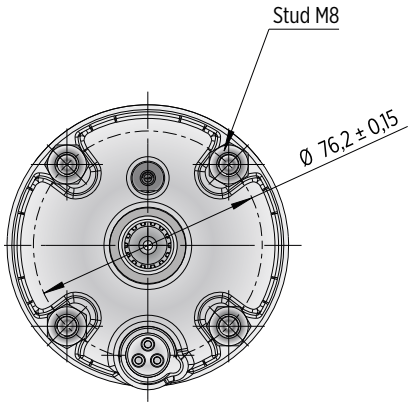

P_N		L [mm]	M [kg]	motor with lead in single pack	
[kW]	[HP]			[mm]	[kg]
0,25	0,33	237,2	6,55	400 x 100 x 110	7,25
0,37	0,50	251,1	7,20	400 x 100 x 110	7,9
0,55	0,75	271,2	8,35	530 x 100 x 110	9,05
0,75	1,00	297,2	9,30	530 x 100 x 110	10,0
1,10	1,50	353,2	10,45	530 x 100 x 110	11,15
1,50	2,0	364,2	11,90	796 x 100 x 110	12,6
2,20	3,0	451,2	16,65	796 x 100 x 110	17,35

Tolerances according to NEMA MG 1-18.388

MOTOR LEADS

MOTOR LEADS 3-WIRE DESIGN

3-wire motor leads			
0.25 - 3.0 kW			
Ø [mm²]	B [mm]	B1 [mm]	H [mm]
3X1,5 + 1G1,5	16,8	10,7	5,0

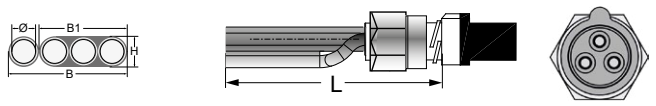

L [m]	Model numbers 304SS	Model numbers 316SS
1,5	310 113 401	310 113 501
2,5	310 113 402	310 113 502
5	310 113 405	310 113 505
10	310 113 410	310 113 510
15	310 113 415	310 113 515
20	310 113 420	310 113 520
30	310 113 430	310 113 530
40	310 113 440	310 113 540
50	310 113 450	310 113 550

Cables are designed for submerged operation. For air operation, please consult Franklin Electric.

3-wire Pollution Recovery motor leads	
0.25 - 3.0 kW	
Ø [mm²]	D Ø [mm]
1,5	9,8

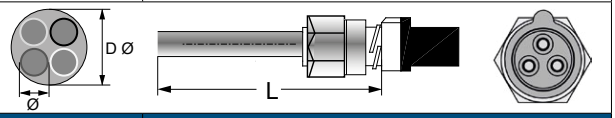

L [m]	Model numbers 316SS
1,5	310 313 501
2,5	310 313 502
10	310 313 510
20	310 313 520
30	310 313 530
40	310 313 540
50	310 313 550

CONNECTION - 3-WIRE DESIGN

3-wire 1~ motors

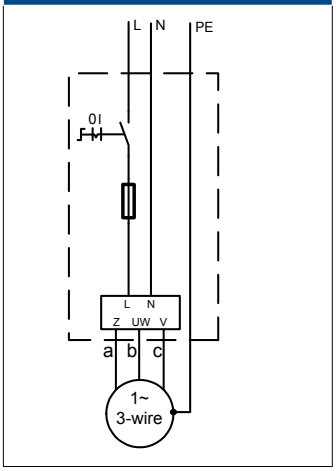

a = black | b = brown | c = grey | PE = yellow/green

MOTOR PART DESCRIPTION

MOTOR DESIGN 0.25 -2.2 KW

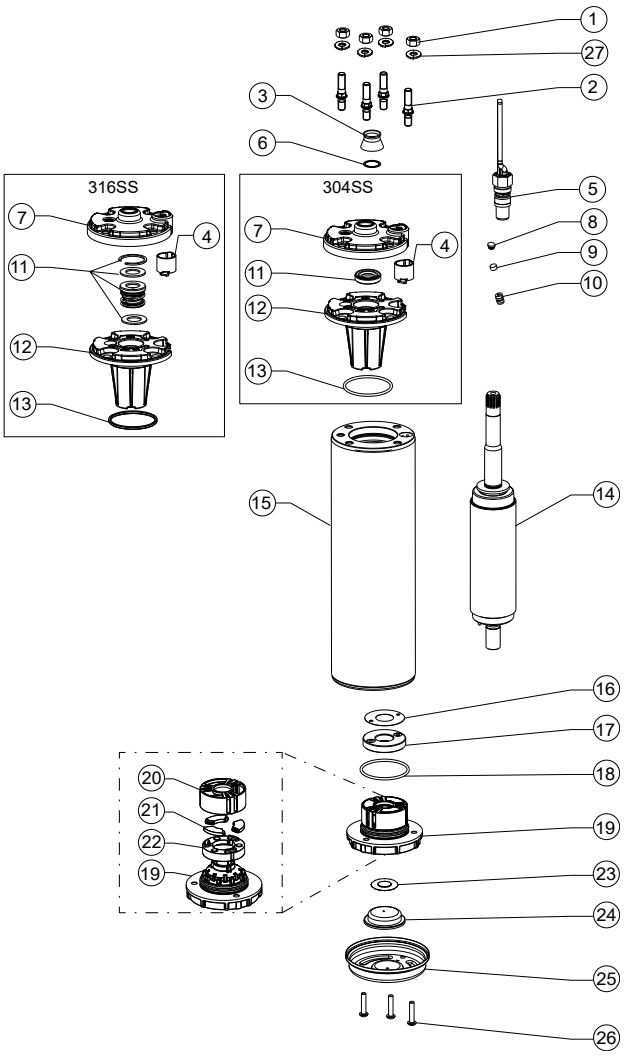

Pos.	Part Description	Qty.	Part No.
1	Nut	4	Kit C
2	Stud	4	Kit C
3	Protector, Spline	1	Kit B
4	Connector boss	1	151 820 103
5	Motor Lead	1	Page 19
6	Washer	1	Kit B
7	Top Endbell, Cover 304SS	1	150 262 151
	Top Endbell, Cover 316SS	1	150 262 251
8	Filter plug	1	Kit
9	Filter	1	Kit
10	Valve	1	Kit
11	Shaft Seal	1	Kit B
12	Top Endbell	1	KIt
13	O-Ring	1	Kit B
14	Rotor	1	Page 21
15	Stator	1	Page 21
16	Level washer	1	Kit A2
17	Thrust disk assy	1	Kit A2
18	O-Ring	1	Kit B / Kit A2
19	Bottom Endbell	1	Kit A2
20	Bearing cage	1	Kit A2
21	Segments	3	Kit A2
22	Gasket	1	Kit A2
23	Diaphragm washer	1	151 314 101 / Kit A2
24	Diaphragm	1	Kit B / KitA2
25	Bottom Endbell Cover 304SS	1	156 414 201 / Kit A2
	Bottom Endbell Cover 316SS	1	156 414 301 / Kit A2
26	Screw, Cover	3	Kit C
27	Lock washer	4	Kit C

MOTOR SPARE PARTS

SPARE PARTS KITS

P_N [kW]	0.25 - 3.0 kW		
Kit A1	Top Endbell 304SS	incl. pos. 4, 7, 8, 9, 10, 11 , 12, 13	308 462 902
	Top Endbell 316SS*		308 462 952
Kit A2	Bottom Endbell 304SS incl. Thrust Bearing Kit 4000N	incl. pos. 16 - 22	308 464 911
	Bottom Endbell 316SS incl. Thrust Bearing Kit 4000N		308 464 912
Kit B	Seal Kit Standard 304SS	incl. pos. 3, 6, 8, 9, 11, 13, 18, 23, 24	308 650 201
	Seal Kit Standard 316SS*		308 650 251
	Seal Kit Pollution Recovery 304SS		308 650 202
	Seal Kit Pollution Recovery 316SS		308 650 252
Kit C	Fastener Kit 304SS	incl. pos. 1, 2, 26, 27	308 656 202
	Fastener Kit 316SS		308 656 252

SPARE PARTS 50HZ 3-WIRE DESIGN - STATOR AND ROTOR 0.25 - 2.2 KW

P_N [kW]	U_N [V]	Model no. stator 304SS / 316SS	Model no. rotor 304SS	Model no. rotor 316SS
0,25	220 / 230	305 491 841	178 164 901K	178 164 921K
0,37	220 / 230	305 491 842	178 164 902K	178 164 922K
0,55	220 / 230	305 491 843	178 164 903K	178 164 923K
0,75	220 / 230	305 491 844	178 164 905K	178 164 925K
1,1	220 / 230	305 491 845	178 164 908K	178 164 928K
1,5	220 / 230	305 491 846	178 164 909K	178 164 929K
2,2	220 / 230	305 491 847	178 164 911K	178 164 931K

SPARE PARTS 60HZ 3-WIRE DESIGN - STATOR AND ROTOR 0.25 - 2.2 KW

P_N [kW]	P_{max} [kW]	U_N [V]	Model no. stator 304SS / 316SS	Model no. rotor 304SS	Model no. rotor 316SS
0,37	0,59	230	305 491 931	178 164 902 K	178 164 923K
0,55	0,83	230	305 491 932	178 164 903 K	178 164 925K
0,75	1	230	305 491 933	178 164 905 K	178 164 927K
1,10	1,4	230	305 491 934	178 164 908K	178 164 928K
1,50	1,8	230	305 491 935	178 164 909K	178 164 929K
2,20	2,5	230	305 491 936	178 164 911K	178 164 931K

4" 3-WIRE HIGH THRUST MOTOR

OPTIONAL

STAINLESS STEEL 304 | STAINLESS STEEL 316

FEATURES & BENEFITS

- NEMA mounting design
- Stainless steel splined shaft
- StatorShield™ - Franklin encapsulation system
- Factory filled with Franklin's FES93 motor fill solution
- Max. storage temperature -15°C - + 50°C
- Liquid lubricated radial bearings and High capacity Kingsbury type thrust bearing for 100 % maintenance free operation
- Field replaceable lead using Franklin's exclusive Water Bloc technology
- optional Franklin Electric 3-wire control boxes for maximum system performance, protection and warranty
- Pressure-equalizing diaphragm
- High efficiency electrical design for low operation costs
- Drinking water approvals
- Suitable for use in water with increased salinity (Brackish water version optional)

Pollution Recovery version:

- Fluorelastomere (Viton®) rubber parts
- Special Polyuretane (PUR) lead assemblies
- 304SS (316SS Stator) graded stainless steel as standard

SPECIFICATION

- Rating: 2,2 - 3,7 kW, 1~
- Voltage: 1~ - 220-230 V / 50 Hz, 230 V / 60 Hz
- Thrust load: 6,5 kN
- Nominal ambient temperature: 30 °C with 0.08 m/s cooling flow
- Voltage tolerance: -10 % / +6 % (50 Hz), ±10 % (60 Hz)
- Protection IP68 and insulation class B
- Frequency of starts: 20 starts/ hour (with min. 3 minutes resting time)
- motors with factory installed leads 2,5 m (optional)
- Installation orientation: Vertical / horizontal (shaft end heightened)
- Rotation counter clock wise facing shaft end (Rotation CW upon request)

OPTIONS

- Built in lightning arrestors
- Various cable lengths
- Motors with factory-installed lead in single packing
- Motor complete in 316SS with SiC seal
- Special voltages

Hydrodynamic liquid lubricated radial bearings

100 % maintenance free operation

StatorSHIELD™ - Franklin encapsulation system

Franklin Electric encapsulated motors are equipped with hermetically-sealed windings. The Anti track stator resin mechanically supports the winding and provides fast heat dissipation.

Kingsbury type thrust bearing

High capacity 4 kN Kingsbury type thrust bearing for 100 % maintenance free operation

Pressure-equalizing diaphragm

4" SUPER STAINLESS HIGH THRUST MOTOR – 3-WIRE DESIGN

MOTOR MODEL NUMBERS 50 HZ - 3-WIRE DESIGN

P_N [kW]	U_N [V]	Digit 1 - 6	Digit 7 - 10							
			304SS Standard		304SS Pollution Recovery		316SS Standard		316SS Pollution Recovery	
			Motors in single pack, with Lead)*	Motors in 40 motors packing unit	Motors in single pack, with Lead)*	Motors in 40 motors packing unit	Motors in single pack, with Lead)*	Motors in 40 motors packing unit	Motors in single pack, with Lead)*	Motors in 40 motors packing unit
2,2	220-230	224 752	3421L	3421	3422L	3422	3521L	3521L	3522L	3522
3,7	220-230	224 753	3421L	3421	3422L	3422	3521L	3521L	3522L	3522

* lead lengths motors: „L“ with 2.50 m pre-mounted cable

MOTOR MODEL NUMBERS 60 HZ - 3-WIRE DESIGN

P_N [kW]	$P_{max.}$ [kW]	U_N [V]	Digit 1-6	Digit 7-10			
				304		316 SS	
				Motors in 40 motors packing unit	Motors in single pack, with Lead)*	Motors in 40 motors packing unit	Motors in single pack, with Lead)*
2,2	2,5	230	224 ---	3421	3421L	3521	3521L
3,7	4,2	230	224 703	3421	3421L	3521	3521L

* lead lengths motors: „L“ with 2.50 m pre-mounted cable

MOTOR PERFORMANCE DATA 50 HZ - 3-WIRE DESIGN

P_N [kW]	Thrust F [N]	U_N [V]	n_N [min-1]	I_N [A]	I_A [A]	η (Eff.) [%] at % load			cos φ (Pf.) at % load			T_N [Nm]	T_A [Nm]
						50	75	100	50	75	100		
2,2	6500	220	2875	15,2	71,2	67	73	74	0,76	0,86	0,91	7,3	13,8
		230	2885	15,3	74,5	63	70	73	0,69	0,80	0,88	7,3	15,0
3,7	6500	220	2880	22,5	97	72	77	78	0,98	0,99	0,99	12,3	16,1
		230	2895	21,4	101	70	76	77	0,97	0,98	0,99	12,2	17,6

MOTOR PERFORMANCE DATA 60 HZ - 3-WIRE DESIGN

P_N [kW]	P_{max} [kW]	Thrust F [N]	U_N [V]	n_N [min-1]	I_N [A]	I_A [A]	η (Eff.) [%] at % load			cos φ (Pf.) at % load			T_N [Nm]	T_A [Nm]
							50	75	100	50	75	100		
2,2	2,5	6500	230	3440	15,1	68	66	73	75	0,98	0,98	0,98	7,0	11,7
3,7	4,2	6500	230	3450	24,5	102	70	76	77	0,98	0,99	0,99	11,7	16,1

WINDING RESISTANCE DATA 50 HZ 220-230V - 3-WIRE DESIGN

P_N [kW]	U_N [V]	Stator Ref.	Main phase [Ohm]	Start sphase[Ohm]
2.2	220 / 230	326 813 912	1,3 - 1,6	3,8 - 4,6
3,7	220 / 230	326 813 912	1,0 - 1,3	2,5 - 3,1

WINDING RESISTANCE DATA 60 HZ 230V - 3-WIRE DESIGN

P_N [kW]	P_{max} [kW]	U_N [V]	Stator-Ref. #	Main phase [Ohm]	Start sphase[Ohm]
2,20	2,5	230	326 897	1,3 - 1,6	3,5 - 4,3
3,7	4,2	230	326 898	0,9 - 1,1	1,7 - 2,1

MOTORDESIGN AND DIMENSION

MOTORDESIGN 304SS 6500N 2,2 - 3,7 KW

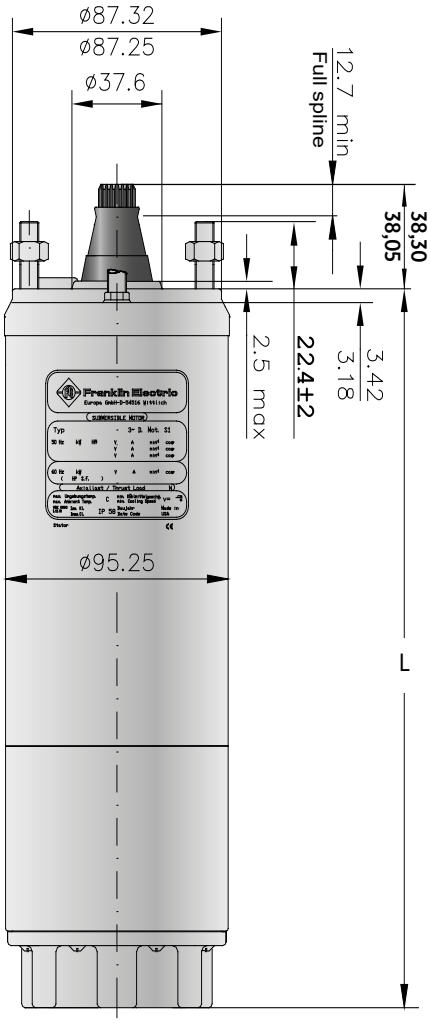

Tolerances according to NEMA MG 1-18.388

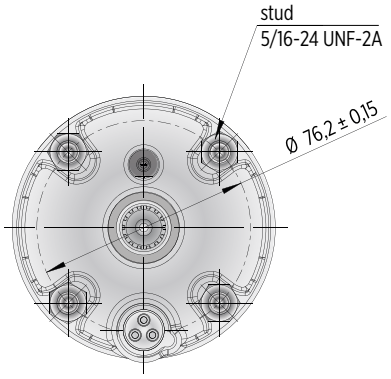

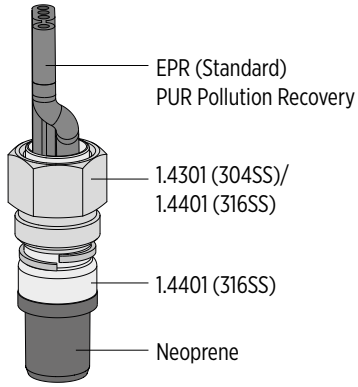

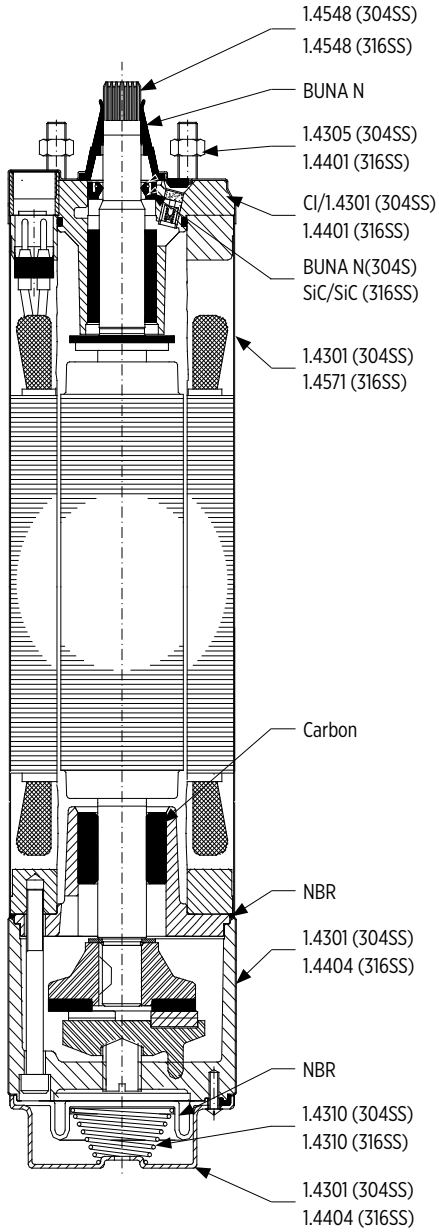

LENGTHS AND WEIGHTS - 3-WIRE DESIGN

P_N [kW]	P_{max} [kW]	304SS L [mm]	316SS L [mm]	304SS M [kg]	316SS M [kg]	motor with lead in single pack		
						[mm]	304SS [kg]	316SS [kg]
2,2	2,5	520,2	529,4	21,3	21,8	796 x 100 x 110	23,1	23,6
3,7	4,2	652,5	661,7	26,4	27,3	904 x 100 x 110	28,5	29,4

MOTOR LEADS

MOTOR LEADS 3-WIRE DESIGN

PSC / 3-wire / 3 Phase motor leads			
0.25 - 3.0 kW			
Ø [mm²]	B [mm]	B1 [mm]	H [mm]
3X1,5 + 1G1,5	16,8	10,7	5,0

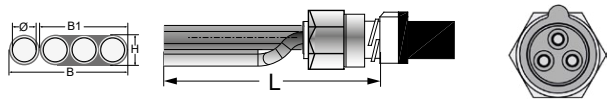

L [m]	Model numbers 304SS	Model numbers 316SS
1,5	310 113 401	310 113 501
2,5	310 113 402	310 113 502
5	310 113 405	310 113 505
10	310 113 410	310 113 510
15	310 113 415	310 113 515
20	310 113 420	310 113 520
30	310 113 430	310 113 530
40	310 113 440	310 113 540
50	310 113 450	310 113 550

3-wire / 3-phase Pollution Recovery motor leads	
0.25 - 3.0 kW	
Ø [mm²]	D Ø [mm]
1,5	9,8

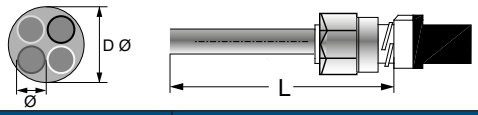

L [m]	Model numbers 316SS
1,5	310 313 501
2,5	310 313 502
10	310 313 510
20	310 313 520
30	310 313 530
40	310 313 540
50	310 313 550

Cables are designed for submerged operation. For air operation, please consult Franklin Electric.

3-wire 1~ Motor

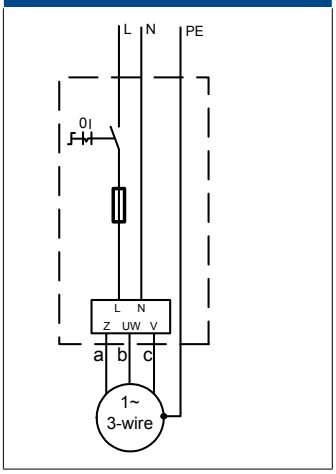

a = black | b = brown | c = grey | PE = yellow/green

MOTOR PART DESCRIPTION

MOTOR DESIGN 304SS 2,2 - 3,7 KW - 304SS

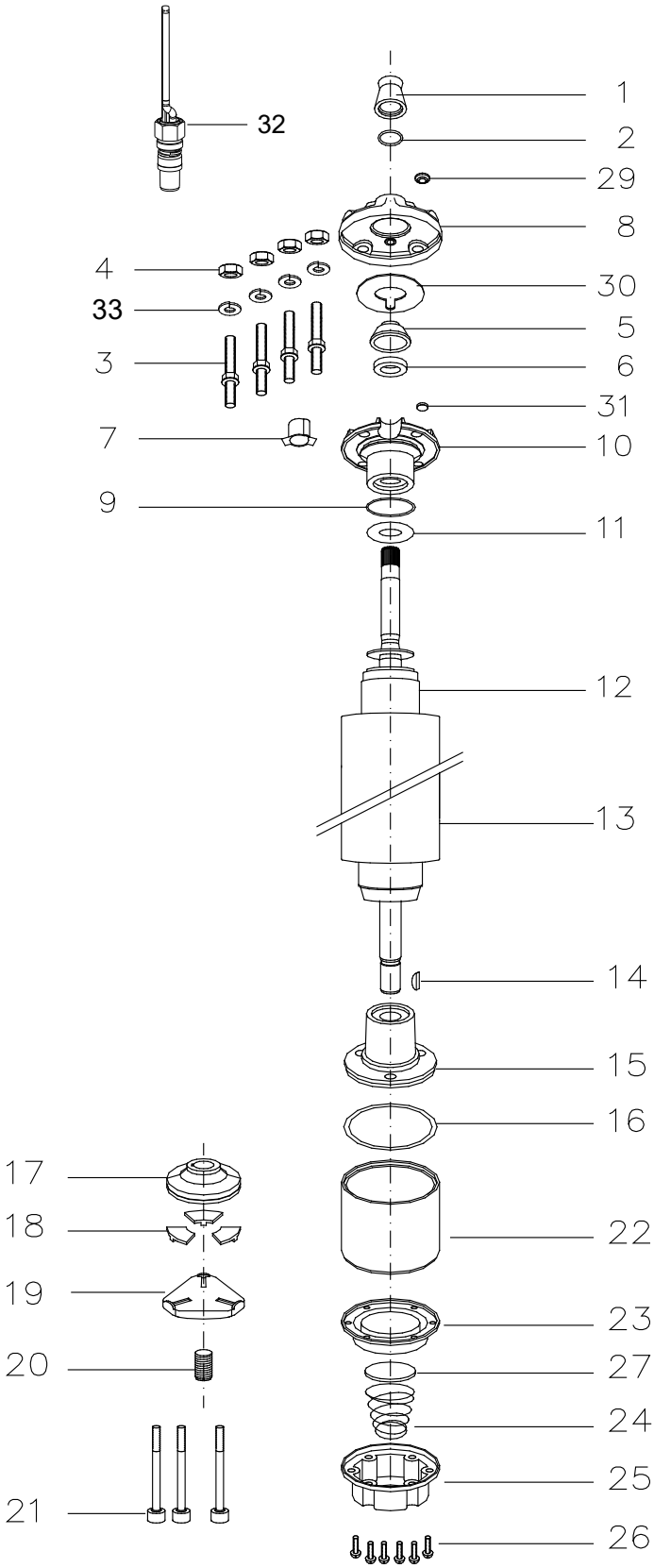

Pos.	Part Description	Qty.	Part No.
1	Protector, Spline	1	Kit B
2	Washer	1	Kit B
3	Stud	4	Kit C
4	Nut	4	Kit C
5	Seal cover	1	Kit D
6	Shaft Seal	1	Kit B+D
7	Connector boss	1	Kit D
8	Top Endbell, Cover	1	Kit D
9	O-Ring	1	Kit B+D
10	Top Endbell	1	Kit D
11	Upthrust washer 2,2 kW	1	308 268 104
	Upthrust washer 3,7 kW		308 317 901
12	Rotor	1	see page 28
13	Stator	1	see page 28
14	Woodruff key	1	275 250 104
15	Bottom Endbell	1	Kit
16	O-Ring	1	Kit B
17	Thrust disc	1	Kit A
18	Segment	1	Kit A
19	Leveling disc	1	155 660 101
20	Screw, adj.	1	151 048 103
21	Screw	3	Kit C
22	Thrust housing	1	177 378 901
23	Diaphragm	1	Kit B
24	Spring	1	151 449 101
25	Cover, Diaphragm	1	164 100 50
26	Screw	6	Kit C
27	Cup spring, Diaphragm	1	151 448 201
29	Sealing stopper	1	Kit B+D
30	Seal	1	Kit D
31	Filter	1	Kit B+D
32	Motor lead	1	see page 25
33	Lock washer	4	Kit C

PARTS DESCRIPTION

MOTOR DESIGN 316SS 2,2 - 3,7 KW - 316SS

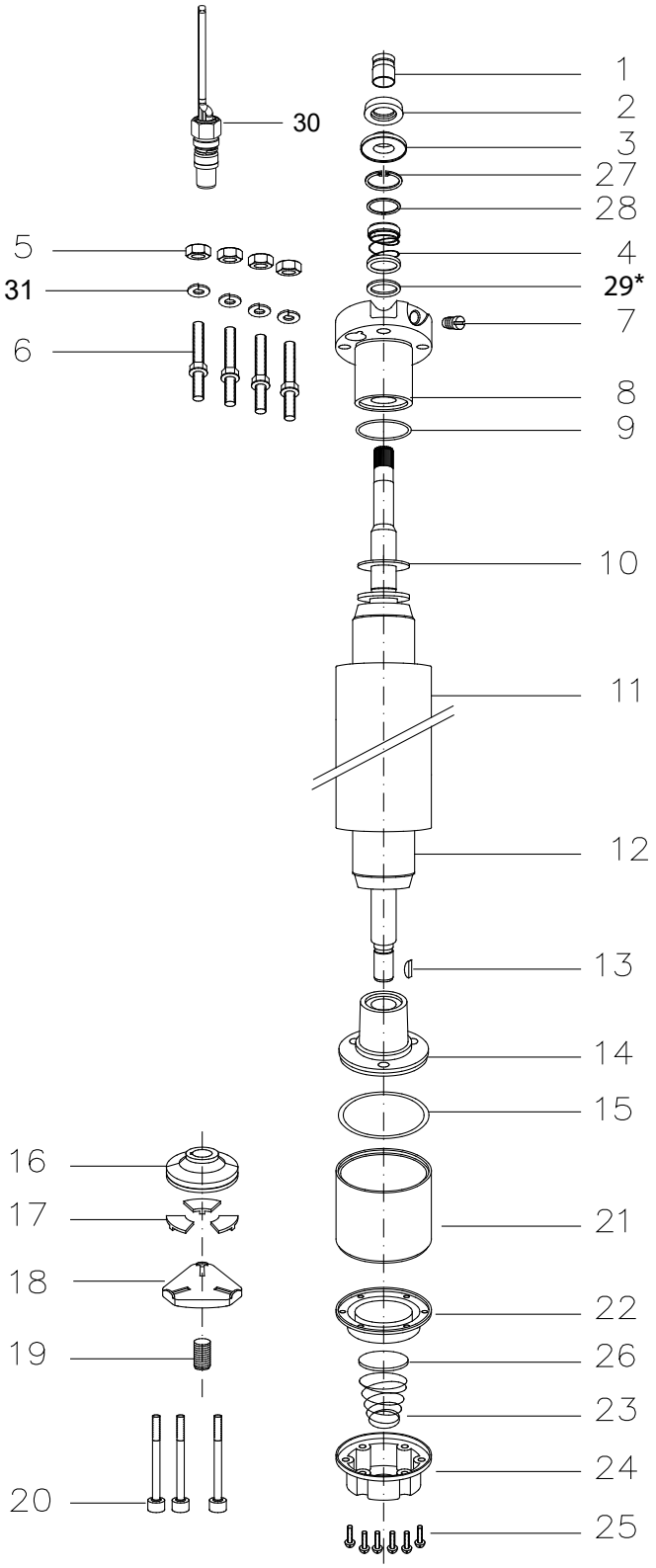

Pos.	Part Description	Qty.	Part No.
1	Protector, Spline	1	Kit C
2	Slinger	1	Kit C
3	Seal cover	1	Kit B + C
4	Shaft Seal	1	Kit B
5	Stud	4	Kit D
6	Nut	4	Kit D
7	Sealing Screw	1	308 279 903
8	Top Endbell	1	Kit
9	O-Ring	1	Kit B
10	Upthrust washer 2,2 kW	1	308 268 104
	Upthrust washer 3,7 kW		308 317 901
11	Stator	1	see page 28
12	Rotor	1	see page 28
13	Woodruff key	1	275 250 104
14	Bottom Endbell	1	Kit
15	O-Ring	1	Kit B
16	Thrust disc	1	Kit A
17	Segments	1	Kit A
18	Leveling disc	1	155 660 101
19	Screw, adj.	1	151 048 103
20	Screw	3	Kit D
21	Thrust housing	1	177 378 951
22	Diaphragm	1	Kit B
23	Spring	1	151 449 101
24	Cover, Diaphragm	1	364 100 50
25	Screw	6	Kit C
26	Cup spring, Diaphragm	1	151 448 201
27	Ring	1	Kit B
28	Retain Ring	1	Kit B
29*	Washer	1	308 747 201
30	Motor lead	1	see page 275
31	Lock washer	4	Kit C

*** only for 2,2 - 3kW**

MOTOR SPARE PARTS

SPARE PARTS KITS

P_N [kW]	2,2 / 3,7 kW		
2,2kW	End bell, upper 304SS	inkl. Pos. 5, 6, 7, 8, 9, 10, 29,30, 31	308 462 902
	End bell, upper 316SS	Pos. 8	177 390 955
3,7kW	End bell, upper 304SS	inkl. Pos. 5, 6, 7, 8, 9, 10, 29,30, 31	308 434 501
	End bell, upper 316SS	Pos. 8	177 390 955
Kit A	Thrust Bearing Kit 6500N	inkl. Pos.17. 18	308 700 301
Kit B	Seal Kit 304SS	inkl. Pos.: 1, 2, 6, 9, 16, 23,29, 31	308 900 351
	Seal Kit 316SS	inkl. Pos.: 4, 9, 15, 22, 27, 28	308 900 302
Kit B1	Seal Kit Pollution Recovery 304SS	inkl. Pos.: 1, 2, 6, 9, 16, 23,29, 31	308 900 401
Kit B2	Sand slinger Kit 316SS Motoren	inkl. Pos.: 1, 2, 3	308 825 201
Kit C	Screw Kit 304SS	inkl. Pos.: 3, 4, 21, 26, 33	308 658 351
	Screw Kit 316SS	inkl. Pos.: 5, 6, 20, 25, 31	308 658 301

SPARE PARTS - STATOR AND ROTOR 304SS - 3-WIRE DESIGN 50HZ

P_N [kW]	U_N [V]	Model nb. Stator 304SS	Model nb. Rotor 304SS
2,2	220 / 230	305 491 181	178 126 903K
3,7	220 / 230	305 491 182	178 133 903K

SPARE PARTS - STATOR AND ROTOR 316SS- 3-WIRE DESIGN 50HZ

P_N [kW]	U_N [V]	Model nb. Stator 316SS	Model nb. Rotor 316SS
2,2	220 / 230	305 491 541	178 126 913K
3,7	220 / 230	305 491 542	178 133 913K

SPARE PARTS - STATOR AND ROTOR 316SS- 3-WIRE DESIGN 60HZ

P_N [kW]	P_{max} [kW]	U_N [V]	Stator 60Hz	Rotor 60Hz
2,2	2,5	230	326 897 ***	178 126 903K
3,7	4,2	230	326 898 ***	178 135 903K

4" SUPER STAINLESS MOTOR – 3-PHASE DESIGN

OPTIONAL

STAINLESS STEEL 304 | STAINLESS STEEL 316

FEATURES & BENEFITS

- 4" NEMA mounting design with metric studs
- Stainless steel splined shaft
- VFD operation is possible up to a rated voltage of 400V (in compliance with the application guidelines in the motor operating instructions and the VFD manufacturer). For VFD operation with higher voltages, please consult Franklin Electric.
- Stator shell in 316SS
- Factory filled with Franklin's non-toxic water soluble fill solution
- Max. storage temperature -15°C - + 50°C
- Liquid lubricated radial bearings and High capacity Kingsbury type thrust bearing for 100 % maintenance free operation
- Field replaceable lead using Franklin's exclusive Water Bloc technology with extended jam nut in Stainless steel
- High efficiency electrical design for low operation costs
- Drinking water approvals
- Suitable for use in water with increased salinity

Pollution Recovery version:

- Fluorelastomere (Viton®) rubber parts
- Special Polyuretane (PUR) lead assemblies
- 304SS (316SS Stator) graded Stainless Steel as Standard

SPECIFICATION

- Ratings: 0.25 - 3.0 kW
- Frequency: 50 Hz ; 60 Hz
- Thrust load: 4 kN
- Nominal ambient temperature: 30 °C with 0.08 m/s cooling flow
- Voltage tolerance: -10 % / +6 % (50 Hz), +/- 10% (60 Hz)
- Protection IP68, insulation class B
- Frequency of starts: 20 starts/ hour (with min. 3 minutes resting time)
- All motors with factory installed leads (1.50 m / 2.50 m)
- Installation orientation: Vertical / horizontal (shaft end heightened)
- Rotation counter clock wise facing shaft end (3 phase motors rotation reversible)

OPTIONS

- Built in lightning arrestors
- 316SS material design
- Special lead lenghts

Hydrodynamic liquid lubricated radial bearings

100 % maintenance free operation

StatorSHIELD™ – Franklin encapsulation system

Franklin Electric encapsulated motors are equipped with hermetically-sealed windings. The Anti track stator resin mechanically supports the winding and provides fast heat dissipation.

Kingsbury type thrust bearing

High capacity 4 kN Kingsbury type thrust bearing for 100 % maintenance free operation

Pressure-equalizing diaphragm

4" SUPER STAINLESS MOTOR – 3-PHASE DESIGN

MOTOR MODEL NUMBERS 50 HZ - 3-PHASE DESIGN*

P_N [kW]	U_N [V]	Digit 1 - 6	Digit 7 - 10							
			Standard 304SS		Pollution Recovery 304SS		Standard 316SS		Pollution Recovery 316SS	
			Single pack, with lead**	40 motors packing unit	Single pack, with lead**	40 motors packing unit	Single pack, with lead**	40 motors packing unit	Single pack, with lead**	40 motors packing unit
0,37	220, 230	234 751	6721L	6721	6723L	6723	6821L	6821	6823L	6823
	380 - 415	234 761	6721L	6721	6723L	6723	6821L	6821	6823L	6823
	500	234 791	6721L	6721	6723L	6723	6821L	6821	6823L	6823
0,55	220, 230	234 752	6721L	6721	6723L	6723	6821L	6821	6823L	6823
	380 - 415	234 762	6721L	6721	6723L	6723	6821L	6821	6823L	6823
	500	234 792	6721L	6721	6723L	6723	6821L	6821	6823L	6823
0,75	220, 230	234 753	6721L	6721	6723L	6723	6821L	6821	6823L	6823
	380 - 415	234 763	6721L	6721	6723L	6723	6821L	6821	6823L	6823
	500	234 793	6721L	6721	6723L	6723	6821L	6821	6823L	6823
1,10	220, 230	234 754	6721L	6721	6723L	6723	6821L	6821	6823L	6823
	380 - 415	234 724	6721L	6721	6723L	6723	6821L	6821	6823L	6823
	500	234 794	6721L	6721	6723L	6723	6821L	6821	6823L	6823
1,50	220, 230	234 755	6721L	6721	6723L	6723	6821L	6821	6823L	6823
	380 - 415	234 725	6721L	6721	6723L	6723	6821L	6821	6823L	6823
	500	234 795	6721L	6721	6723L	6723	6821L	6821	6823L	6823
2,20	220, 230	234 756	6721L	6721	6723L	6723	6821L	6821	6823L	6823
	380 - 415	234 726	6721L	6721	6723L	6723	6821L	6821	6823L	6823
	500	234 796	6721L	6721	6723L	6723	6821L	6821	6823L	6823
3,00	220, 230	234 766	6721L	6721	6723L	6723	6821L	6821	6823L	6823
	380 - 415	234 764	6721L	6721	6723L	6723	6821L	6821	6823L	6823
	500	234 768	6721L	6721	6723L	6723	6821L	6821	6823L	6823

* VFD operation is only allowed up to 400V supply voltage, for higher voltages please consult Franklin Electric
**lead lengths motors: „L“: up to 1.5 kW with 1.50 m preassembled cable, starting at 2.2 kW with 2.50 m pre-mounted cable

4" SUPER STAINLESS MOTOR – 3-PHASE DESIGN

MOTOR MODEL NUMBERS 60 HZ - 3-PHASE DESIGN*

P_N [kW]	P_{MAX} [kW]	U_N [V]	Digit 1 - 6	Digit 7 - 10							
				Standard 304SS		Pollution Recovery 304SS		Standard 316SS		Pollution Recovery 316SS	
				Single pack, with lead*	40 motors packing unit	Single pack, with lead**	40 motors packing unit	Single pack, with lead**	40 motors packing unit	Single pack, with lead**	40 motors packing unit
0,37	0,59	220	234 711	6721L	6721	6723L	6723	6821L	6821	6823L	6823
		380	234 741	6721L	6721	6723L	6723	6821L	6821	6823L	6823
		460	234 761	6721L	6721	6723L	6723	6821L	6821	6823L	6823
0,55	0,83	220	234 712	6721L	6721	6723L	6723	6821L	6821	6823L	6823
		380	234 742	6721L	6721	6723L	6723	6821L	6821	6823L	6823
		460	234 762	6721L	6721	6723L	6723	6821L	6821	6823L	6823
0,75	1	220	234 713	6721L	6721	6723L	6723	6821L	6821	6823L	6823
		380	234 743	6721L	6721	6723L	6723	6821L	6821	6823L	6823
		460	234 763	6721L	6721	6723L	6723	6821L	6821	6823L	6823
1,10	1,4	220	234 714	6721L	6721	6723L	6723	6821L	6821	6823L	6823
		380	234 744	6721L	6721	6723L	6723	6821L	6821	6823L	6823
		460	234 724	6721L	6721	6723L	6723	6821L	6821	6823L	6823
1,50	1,8	220	234 715	6721L	6721	6723L	6723	6821L	6821	6823L	6823
		380	234 745	6721L	6721	6723L	6723	6821L	6821	6823L	6823
		460	234 725	6721L	6721	6723L	6723	6821L	6821	6823L	6823
2,20	2,5	220	234 716	6721L	6721	6723L	6723	6821L	6821	6823L	6823
		380	234 746	6721L	6721	6723L	6723	6821L	6821	6823L	6823
		460	234 726	6721L	6721	6723L	6723	6821L	6821	6823L	6823
3,00	3,4	220	234 776	6721L	6721	6723L	6723	6821L	6821	6823L	6823
		380	234 774	6721L	6721	6723L	6723	6821L	6821	6823L	6823
		460	234 764	6721L	6721	6723L	6723	6821L	6821	6823L	6823

* VFD operation is only allowed up to 400V supply voltage, for higher voltages please consult Franklin Electric
**lead lengths motors: „L“: up to 1.5 kW with 1.50 m preassembled cable, starting at 2.2 kW with 2.50 m pre-mounted cable

4" SUPER STAINLESS MOTOR – 3-PHASE DESIGN

MOTOR PERFORMANCE DATA 50 HZ - 3-PHASE DESIGN

P_N [kW]	Thrust F [N]	U_N [V]	n_N [min^{-1}]	I_N [A]	I_A [A]	η (Eff.) [%] at % load			cos φ (Pf.) at % load			T_N [Nm]	T_A [Nm]
						50	75	100	50	75	100		
0,37	4000	220	2850	1,91	8,83	55	63	66	0,60	0,71	0,79	1,23	2,70
		230	2870	1,90	9,36	54	63	66	0,55	0,66	0,74	1,22	3,00
		380	2850	1,10	5,10	55	63	66	0,60	0,71	0,79	1,23	2,70
		400	2870	1,10	5,41	54	63	66	0,55	0,66	0,74	1,22	3,00
		415	2880	1,14	5,61	53	61	65	0,51	0,62	0,71	1,23	3,20
		500	2830	0,84	3,88	55	63	68	0,60	0,71	0,79	1,23	2,70
0,55	4000	220	2855	2,7	12,2	57	64	68	0,60	0,71	0,79	1,84	3,80
		230	2870	2,8	12,9	55	63	68	0,53	0,65	0,74	1,82	4,20
		380	2855	1,6	7,0	57	64	68	0,60	0,71	0,79	1,84	3,80
		400	2870	1,6	7,4	55	63	68	0,53	0,65	0,74	1,82	4,20
		415	2880	1,7	7,7	50	60	65	0,50	0,61	0,70	1,82	4,60
		500	2855	1,2	5,3	57	64	68	0,60	0,71	0,79	1,84	3,80
0,75	4000	220	2840	3,5	17,4	63	69	70	0,61	0,73	0,81	2,51	6,05
		230	2865	3,5	18,3	61	68	70	0,55	0,68	0,77	2,49	6,70
		380	2840	2,0	10,1	63	69	70	0,61	0,73	0,81	2,51	6,05
		400	2865	2,0	10,6	61	68	70	0,55	0,68	0,77	2,49	6,70
		415	2875	2,1	10,9	58	66	69	0,51	0,63	0,73	2,48	7,20
		500	2840	1,5	7,6	63	69	70	0,61	0,73	0,81	2,51	6,05
1,1	4000	220	2830	4,9	26,4	68	73	74	0,63	0,75	0,82	3,71	10,23
		230	2850	4,9	27,8	66	72	74	0,57	0,69	0,78	3,67	11,33
		380	2830	2,8	15,3	68	73	74	0,63	0,75	0,82	3,71	10,23
		400	2850	2,8	16,0	66	72	74	0,57	0,69	0,78	3,67	11,33
		415	2865	2,9	16,7	64	70	73	0,52	0,65	0,74	3,64	12,20
		500	2830	2,1	11,6	68	73	74	0,63	0,75	0,82	3,71	10,23
1,5	4000	220	2830	6,7	34,0	67	72	73	0,62	0,74	0,83	5,04	12,77
		230	2855	6,7	35,9	65	71	73	0,55	0,68	0,78	5,00	14,10
		380	2830	3,9	19,7	67	72	73	0,62	0,74	0,83	5,04	12,77
		400	2855	3,9	20,7	65	71	73	0,55	0,68	0,78	5,00	14,10
		415	2865	4,0	21,5	62	69	72	0,50	0,63	0,73	5,00	15,20
		500	2830	2,9	14,9	67	72	73	0,62	0,74	0,83	5,04	12,77
2,2	4000	220	2820	9,3	49,0	71	75	75	0,6	0,74	0,82	7,42	19,87
		230	2845	9,5	51,6	69	74	75	0,52	0,66	0,77	7,37	22
		380	2820	5,4	28,3	71	75	75	0,6	0,74	0,82	7,42	19,87
		400	2845	5,5	29,8	69	74	75	0,52	0,66	0,77	7,37	22
		415	2855	5,8	30,9	65	72	74	0,47	0,61	0,72	7,33	23,67
		500	2820	4,1	21,5	71	75	75	0,6	0,74	0,82	7,42	19,87
3	4000	220	2820	12,8	69,1	73	77	77	0,61	0,74	0,82	10,16	28,80
		230	2845	13,0	72,8	70	76	76	0,53	0,67	0,77	10,06	31,93
		380	2820	7,4	39,9	73	77	77	0,61	0,74	0,82	10,16	28,80
		400	2845	7,5	42,0	70	76	76	0,53	0,67	0,77	10,06	31,93
		415	2855	7,9	43,6	67	73	75	0,47	0,61	0,72	10,04	34,33
		500	2820	5,6	30,3	73	77	77	0,61	0,74	0,82	10,16	28,80

MOTOR PERFORMANCE DATA 60 HZ - 3-PHASE DESIGN

P_N [kW]	P_{MAX} [kW]	Thrust F [N]	U_N [V]	n_N [min^{-1}]	I_N [A]	I_A [A]	η (Eff.) [%] at % load			cos φ (Pf.) at % load			T_N [Nm]	T_A [Nm]
							50	75	100	50	75	100		
0,37	0,59	4000	230	3455	2,7	14,1	65	71	73	0,56	0,68	0,77	1,6	4,0
			380	3455	1,6	8,5	65	71	73	0,56	0,68	0,77	1,6	4,0
			460	3455	1,4	7,0	65	71	73	0,56	0,68	0,77	1,6	4,0
0,55	0,83	4000	230	3445	3,7	19,6	60	65	66	0,59	0,71	0,79	2,3	5,6
			380	3445	2,3	11,9	60	65	66	0,59	0,71	0,79	2,3	5,6
			460	3445	1,9	9,8	60	65	66	0,59	0,71	0,79	2,3	5,6
0,75	1	4000	230	3410	4,5	22,0	61	67	70	0,64	0,75	0,82	2,8	6,4
			380	3410	2,7	13,3	61	67	70	0,64	0,75	0,82	2,8	6,4
			460	3410	2,3	11,0	61	67	70	0,64	0,75	0,82	2,8	6,4
1,1	1,4	4000	230	3415	6,0	32,2	66	72	74	0,64	0,75	0,82	3,9	10,2
			380	3415	3,6	19,5	66	72	74	0,64	0,75	0,82	3,9	10,2
			460	3415	3,0	16,1	66	72	74	0,64	0,75	0,82	3,9	10,2
1,5	1,8	4000	230	3430	7,8	40,8	67	73	75	0,60	0,72	0,80	5,0	11,5
			380	3430	4,7	24,7	67	73	75	0,60	0,72	0,80	5,0	11,5
			460	3430	3,9	20,4	67	73	75	0,60	0,72	0,80	5,0	11,5
2,2	2,5	4000	230	3425	10,8	57,4	69	74	76	0,57	0,70	0,78	7,0	18,0
			380	3425	6,5	34,7	69	74	76	0,57	0,70	0,78	7,0	18,0
			460	3425	5,4	28,7	69	74	76	0,57	0,70	0,78	7,0	18,0
3	3,4	4000	230	3425	14,5	79,4	71	76	77	0,57	0,70	0,79	9,5	23,8
			380	3425	8,8	48,1	71	76	77	0,57	0,70	0,79	9,5	23,8
			460	3425	7,2	39,7	71	76	77	0,57	0,70	0,79	9,5	23,8

4" SUPER STAINLESS MOTOR – 3-PHASE DESIGN

WINDING RESISTANCE DATA 50 HZ - 3-PHASE DESIGN

P_N [kW]	U_N [V]	Stator-Ref.	Main phase [Ohm]
0,37	220 - 230	326 775 ***	14,6 - 17,8
	380 - 400 - 415	326 710 ***	44,8 - 54,8
	500	326 787 ***	90,8 - 111,0
0,55	220 - 230	326 776 ***	11,3 - 13,8
	380 - 400 - 415	326 711 ***	34,2 - 41,8
	500	326 788 ***	57,3 - 70,0
0,75	220 - 230	326 777 ***	7,6 - 9,2
	380 - 400 - 415	326 712 ***	23,2 - 28,3
	500	326 789 ***	38,7 - 47,3
1,1	220 - 230	326 778 ***	4,5 - 5,4
	380 - 400 - 415	326 713 ***	13,8 - 16,8
	500	326 790 ***	23,1 - 28,3
1,5	220 - 230	326 779 ***	3,6 - 4,3
	380 - 400 - 415	326 714 ***	10,9 - 13,4
	500	326 791 ***	20,7 - 25,3
2,2	220 - 230	326 780 ***	2,5 - 3,0
	380 - 400 - 415	326 715 ***	7,1 - 8,6
	500	326 792 ***	11,9 - 14,5
3	220 - 230	326 781 ***	1,5 - 1,9
	380 - 400 - 415	326 716 ***	4,7 - 5,8
	500	326 793 ***	8,4 - 10,2

WINDING RESISTANCE DATA 60 HZ - 3-PHASE DESIGN

P_N [kW]	P_{MAX} [kW]	U_N [V]	Stator-Ref.	Main phase [Ohm]
0,37	0,59	230	326 828	9,4 - 11,5
		380	326 838	24,1 - 29,5
		460	326 710	
0,55	0,83	230	326 829	6,3 - 7,7
		380	326 839	16,5 - 20,2
		460	326 711	
0,75	1	230	326 830	5,7 - 6,9
		380	326 840	15,5 - 19,0
		460	326 712	23,2 - 28,3
1,1	1,4	230	326 831	3,4 - 4,1
		380	326 841	9,3 - 11,4
		460	326 713	13,8 - 16,8
1,5	1,8	230	326 832	2,7 - 3,3
		380	326 842	7,6 - 9,2
		460	326 714	10,9 - 13,4
2,2	2,5	230	326 833	1,8 - 2,2
		380	326 843	4,9 - 6,0
		460	326 715	7,1 - 8,6
3	3,4	230	326 834	1,2 - 1,4
		380	326 844	3,2 - 4,0
		460	326 716	4,7 - 5,8

MOTOR DESIGN AND DIMENSIONS

MOTOR DESIGN 304SS 4000N 0,37 - 3,0 KW

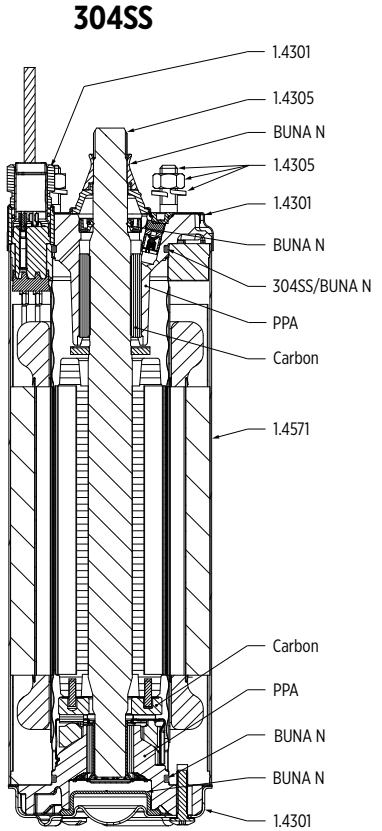

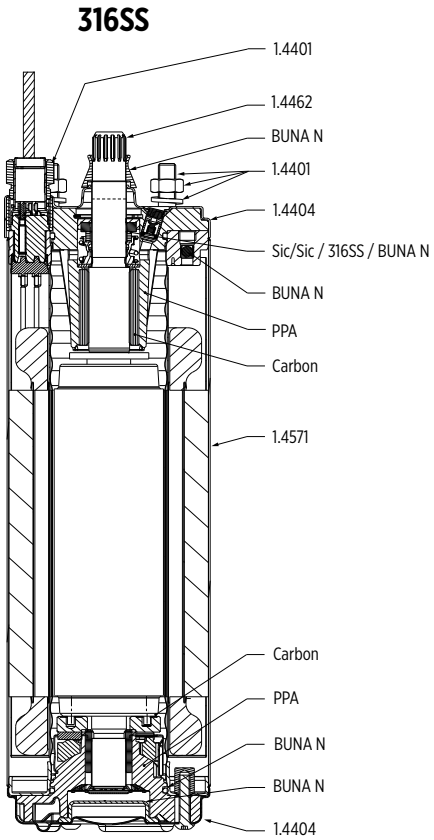

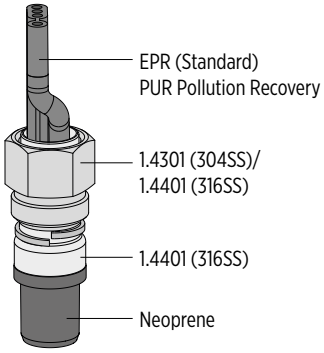

LENGTHS AND WEIGHTS - 3-PHASE DESIGN

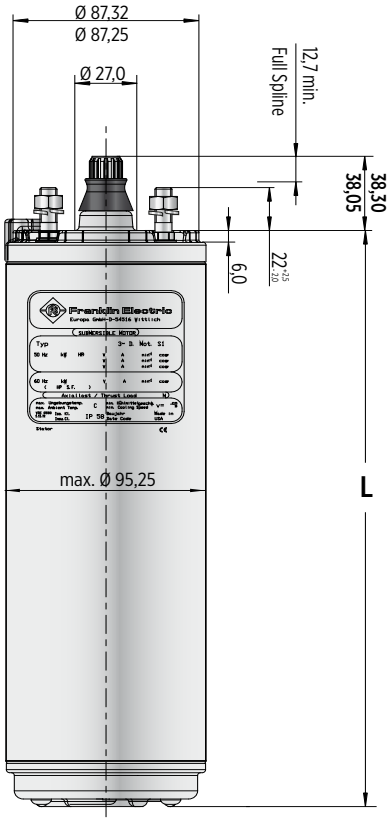

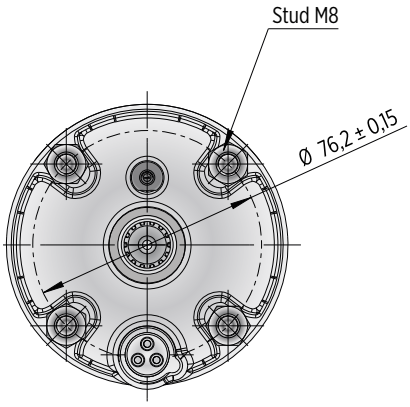

P_N		L [mm]	M [kg]	motor with lead in single pack	
[kW]	[HP]			[mm]	[kg]
0,37	0,5	237,2	5,58	400 x 100 x 110	6,3
0,55	0,75	251,1	6,40	400 x 100 x 110	7,2
0,75	1,0	271,2	7,25	530 x 100 x 110	8,0
1,10	1,5	297,2	8,55	530 x 100 x 110	9,3
1,50	2,0	321,2	9,55	530 x 100 x 110	10,3
2,20	3,0	353,2	11,05	796 x 100 x 110	11,8
3,0	4,0	408,2	13,55	796 x 100 x 110	14,3

Tolerances according to NEMA MG 1-18.388

MOTOR LEADS 3-PHASE DESIGN

3 Phase motor leads			
0.25 - 3.0 kW			
Ø [mm²]	B [mm]	B1 [mm]	H [mm]
3X1,5 + 1G1,5	16,8	10,7	5,0

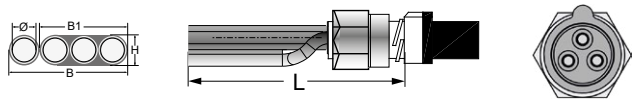

L [m]	Model numbers 304SS	Model numbers 316SS
1,5	310 113 401	310 113 501
2,5	310 113 402	310 113 502
5	310 113 405	310 113 505
10	310 113 410	310 113 510
15	310 113 415	310 113 515
20	310 113 420	310 113 520
30	310 113 430	310 113 530
40	310 113 440	310 113 540
50	310 113 450	310 113 550

Cables are designed for submerged operation. For air operation, please consult Franklin Electric.

3-phase Pollution Recovery motor leads	
0.25 - 3.0 kW	
Ø [mm²]	D Ø [mm]
1,5	9,8

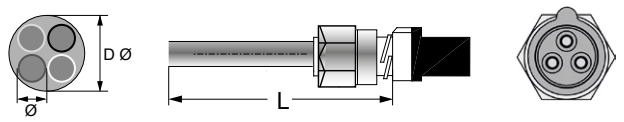

L [m]	Model numbers 316SS
1,5	310 313 501
2,5	310 313 502
10	310 313 510
20	310 313 520
30	310 313 530
40	310 313 540
50	310 313 550

CONNECTION - 3-PHASE DESIGN

3~ Motor DOL

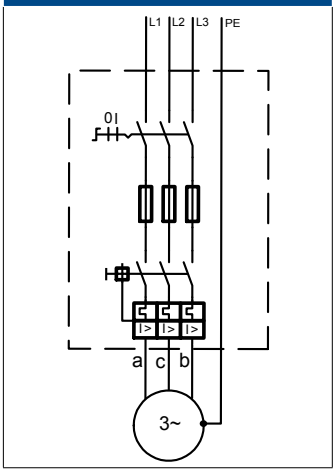

a = black | b = brown | c = grey | PE = yellow/green

MOTOR PART DESCRIPTION

MOTOR DESIGN 0.37 - 3.0 KW

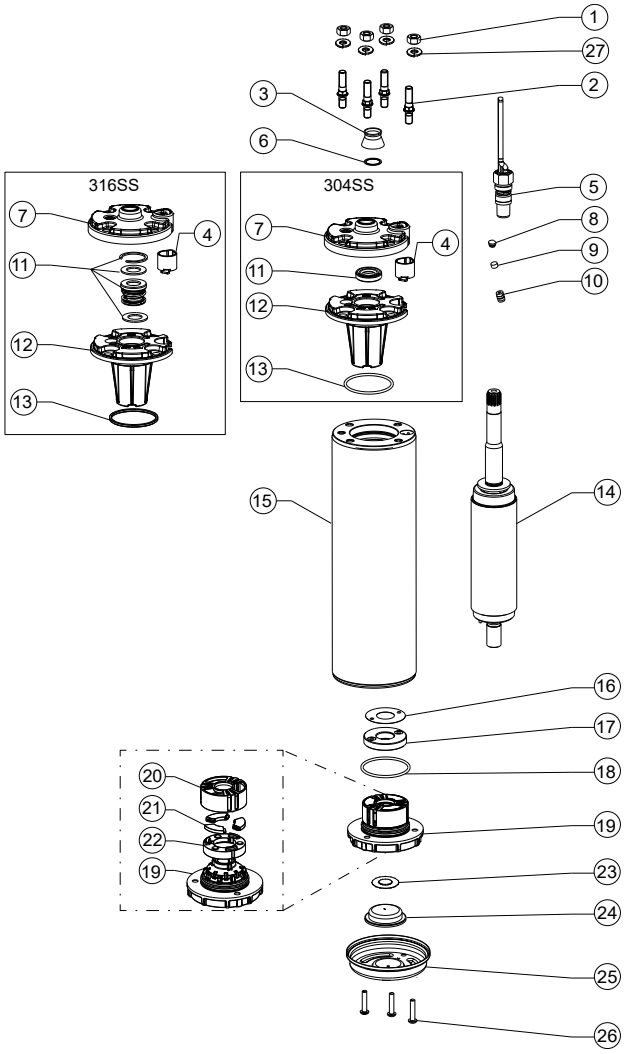

Pos.	Part Description	Qty.	Part No.
1	Nut	4	Kit C
2	Stud	4	Kit C
3	Protector, Spline	1	Kit B
4	Connector boss	1	151 820 103
5	Motor Lead	1	Page 36
6	Washer	1	Kit B
7	Top Endbell, Cover 304SS	1	150 262 151
	Top Endbell, Cover 316SS	1	150 262 251
8	Filter plug	1	Kit
9	Filter	1	Kit
10	Valve	1	Kit
11	Shaft Seal	1	Kit B
12	Top Endbell	1	KIt
13	O-Ring	1	Kit B
14	Rotor	1	Page 38/39
15	Stator	1	Page 38/39
16	Level washer	1	Kit A2
17	Thrust disk assy	1	Kit A2
18	O-Ring	1	Kit B / Kit A2
19	Bottom Endbell	1	Kit A2
20	Bearing cage	1	Kit A2
21	Segments	3	Kit A2
22	Gasket	1	Kit A2
23	Diaphragm washer	1	151 314 101 / Kit A2
24	Diaphragm	1	Kit B / KitA2
25	Bottom Endbell Cover 304SS	1	156 414 201 / Kit A2
	Bottom Endbell Cover 316SS	1	156 414 301 / Kit A2
26	Screw, Cover	3	Kit C
27	Lock washer	4	Kit C

MOTOR SPARE PARTS

SPARE PARTS KITS

P_N [kW]	0.25 - 3.0 kW		
Kit A1	Top Endbell 304SS	incl. pos. 4, 7, 8, 9, 10, 11 , 12, 13	308 462 902
	Top Endbell 316SS		308 462 952
Kit A2	Bottom Endbell 304SS incl. Thrust Bearing Kit 4000N	incl. pos. 16 - 22	308 464 911
	Bottom Endbell 316SS incl. Thrust Bearing Kit 4000N		308 464 912
Kit B	Seal Kit Standard 304SS	incl. pos. 3, 6, 8, 9, 11, 13, 18, 23, 24	308 650 201
	Seal Kit Standard 316SS*		308 650 251
	Seal Kit Pollution Recovery 304SS		308 650 202
	Seal Kit Pollution Recovery 316SS		308 650 252
Kit C	Fastener Kit 304SS	incl. pos. 1, 2, 26, 27	308 656 202
	Fastener Kit 316SS		308 656 252

SPARE PARTS 3~ DESIGN 50 HZ - STATOR AND ROTOR 0.37 - 3.0 KW

P_N [kW]	U_N [V]	Model no. stator 304SS / 316SS	Model no. rotor 304SS	Model no. rotor 316SS
0,37	220, 230	305 491 851	178 164 901K	178 164 921K
	380 -415	305 491 861		
	500	305 491 871		
0,55	220, 230	305 491 852	178 164 902 K	178 164 922K
	380 -415	305 491 862		
	500	305 491 872		
0,75	220, 230	305 491 853	178 164 903 K	178 164 923K
	380 -415	305 491 863		
	500	305 491 873		
1,1	220, 230	305 491 854	178 164 905 K	178 164 925K
	380 -415	305 491 864		
	500	305 491 874		
1,5	220, 230	305 491 855	178 164 907K	178 164 927K
	380 -415	305 491 865		
	500	305 491 875		
2,2	220, 230	305 491 856	178 164 908K	178 164 928K
	380 -415	305 491 866		
	500	305 491 876		
3,0	220, 230	305 491 857	178 164 910K	178 164 920K
	380 -415	305 491 867		
	500	305 491 877		

SPARE PARTS 3~ DESIGN 60 HZ - STATOR AND ROTOR 0.37 - 3.0 KW

P_N [kW]	$P_{N\ max.}$ [kW]	U_N [V]	Model no. stator 304SS / 316SS	Model no. rotor 304SS	Model no. rotor 316SS
0,37	0,59	230	305 491 901	178 164 901K	178 164 921K
		380	305 491 911		
		460	305 491 921E		
0,55	0,83	230	305 491 902	178 164 902K	178 164 922K
		380	305 491 912		
		460	305 491 922E		
0,75	1	230	305 491 903	178 164 903K	178 164 923K
		380	305 491 913		
		460	305 491 923E		
1,10	1,4	230	305 491 904	178 164 905K	178 164 925K
		380	305 491 914		
		460	305 491 924E		
1,50	1,8	230	305 491 905	178 164 907K	178 164 927K
		380	305 491 915		
		460	305 491 925E		
2,20	2,5	230	305 491 906	178 164 908K	178 164 928K
		380	305 491 916		
		460	305 491 926E		
3,00	3,4	230	305 491 907	178 164 910K	178 164 930K
		380	305 491 917		
		460	305 491 927E		

4" 3-PHASE HIGH THRUST MOTORS

OPTIONAL

STAINLESS STEEL 304

STAINLESS STEEL 316

FEATURES & BENEFITS

- NEMA mounting design
- Stainless steel splined shaft
- VFD operation is possible up to a rated voltage of 400V (in compliance with the application guidelines in the motor operating instructions and the VFD manufacturer).
  For VFD operation with higher voltages, please consult Franklin Electric.
- StatorShield™ - Franklin encapsulation system
- Factory filled with Franklin's FES93 motor fill solution
- Max. storage temperature -15°C - + 50°C
- Liquid lubricated radial bearings and High capacity Kingsbury type thrust bearing for 100 % maintenance free operation
- Field replaceable lead using Franklin's exclusive Water Bloc technology
- Pressure-equalizing diaphragm
- High efficiency electrical design for low operation costs
- Drinking water approvals
- Suitable for use in water with increased salinity (Brackish water version optional)

Pollution Recovery version:

- Fluorelastomere (Viton®) rubber parts
- Special Polyuretane (PUR) lead assemblies
- 304SS (316SS Stator) graded stainless steel as standard

SPECIFICATION

- Rating: 2,2 - 9,3kW
- Voltage: 3~ - 230/400/500 V / 50 Hz, 230/380/460 V / 60 Hz
- Thrust load: 6500 N
- Nominal ambient temperature: 30 °C with 0.08 m/s cooling flow
- Voltage tolerance: -10 % / +6 % (50 Hz), ±10 % (60 Hz)
- Protection IP68 and insulation class B
- Frequency of starts: 20 starts/ hour (with min. 3 minutes resting time)
- Motors with factory installed leads (optional)
- Installation orientation: Vertical / horizontal (shaft end heightened)
- Rotation counter clock wise facing shaft end (Rotation CW upon request)

OPTIONS

- Built in lightning arrestors
- Various cable lengths
- Motors with factory-installed lead in single packing
- Motor complete in 316SS with SiC seal
- Special voltages

Hydrodynamic liquid lubricated radial bearings

100 % maintenance free operation

StatorSHIELD™ - Franklin encapsulation system

Franklin Electric encapsulated motors are equipped with hermetically-sealed windings. The Anti track stator resin mechanically supports the winding and provides fast heat dissipation.

Kingsbury type thrust bearing

High capacity 4 kN Kingsbury type thrust bearing for 100 % maintenance free operation

Pressure-equalizing diaphragm

4" SUPER STAINLESS MOTOR – 3-PHASE DESIGN

MOTOR MODEL NUMBERS 50 HZ - 3-PHASE DESIGN*

P_N [kW]	U_N [V]	Digit 1 - 6		Digit 7 - 10					
				Standard 304SS		Standard 316SS		Pollution Recovery 304SS	Brackish water Motor
		DOL	YΔ (only 316SS)	Single pack, with lead**	40 motors packing unit	Single pack, with lead**	40 motors packing unit	Single pack, with lead**	Single pack, with lead*
2,2	220, 230	234 756	234 780	3421L	3421	3521L	3521	3422L	3424L
	380 - 415	234 726	234 770	3421L	3421	3521L	3521	3422L	3424L
	500	234 796	-	3421L	3421	3521L	3521	3422L	3424L
3,0	220, 230	234 766	234 781	3421L	3421	3521L	3521	3422L	3424L
	380 - 415	234 764	234 771	3421L	3421	3521L	3521	3422L	3424L
	500	234 768	-	3421L	3421	3521L	3521	3422L	3424L
3,7	220, 230	234 757	234 782	3421L	3421	3521L	3521	3422L	3424L
	380 - 415	234 727	234 772	3421L	3421	3521L	3521	3422L	3424L
	500	234 797	-	3421L	3421	3521L	3521	3422L	3424L
4,0	220, 230	234 767	234 783	3421L	3421	3521L	3521	3422L	3424L
	380 - 415	234 765	234 773	3421L	3421	3521L	3521	3422L	3424L
	500	234 769	-	3421L	3421	3521L	3521	3422L	3424L
5,5	220, 230	234 758	234 784	3421L	3421	3521L	3521	3422L	3424L
	380 - 415	234 728	234 778	3421L	3421	3521L	3521	3422L	3424L
	500	234 798	-	3421L	3421	3521L	3521	3422L	3424L
7,5	220, 230	-	-	3421L	3421	3521L	3521	3422L	3424L
	380 - 415	234 729	234 779	3421L	3421	3521L	3521	3422L	3424L
	500	234 799	-	3421L	3421	3521L	3521	3422L	3424L
9,3	380 - 415	234 788	-	3429L	-	3529L	-	-	-

* VFD operation is only allowed up to 400V supply voltage, for higher voltages please consult Franklin Electric Europa GmbH
** lead lengths motors: „L“ with 2.50 m pre-mounted cable

4" SUPER STAINLESS MOTOR – 3-PHASE DESIGN

MOTOR MODEL NUMBERS 60 HZ - 3-PHASE DESIGN*

P_N [kW]	$P_{N\ max.}$ [kW]	U_N [V]	Digit 1-6		Digit 7-10			
					Standard 304SS		Standard 316SS	
			DOL	YΔ (only 316SS)	40 motors packing unit	Single pack, with lead**	40 motors packing unit	Single pack, with lead**
2,2	2,5	230	234 716	234 780	3421	3421L	3521	3521L
		380	234 746	234 770	3421	3421L	3521	3521L
		460	234 726	-	3421E	3421EL	3521E	3521EL
3,0	3,4	230	234 776	234 781	3421	3421L	3521	3521L
		380	234 774	234 771	3421	3421L	3521	3521L
		460	234 764	-	3421E	3421EL	3521E	3521EL
3,7	4,2	230	234 717	234 782	3421	3421L	3521	3521L
		380	234 747	234 772	3421	3421L	3521	3521L
		460	234 727	-	3421E	3421EL	3521E	3521EL
4,0	4,7	230	234 777	234 783	3421	3421L	3521	3521L
		380	234 775	234 773	3421	3421L	3521	3521L
		460	234 765	-	3421E	3421EL	3521E	3521EL
5,5	6,4	230	234 718	234 784	3421	3421L	3521	3521L
		380	234 748	234 778	3421	3421L	3521	3521L
		460	234 728	-	3421E	3421EL	3521E	3521EL
7,5	8,6	230	234 719	-	3421	3421L	3521	3521L
		380	234 749	234 780	3421	3421L	3521	3521L
		460	234 729	-	3421E	3421EL	3521E	3521EL

* VFD operation is only allowed up to 400V supply voltage, for higher voltages please consult Franklin Electric Europa GmbH
** lead lengths motors: „L“ with 2.50 m pre-mounted cable

4" SUPER STAINLESS MOTOR – 3-PHASE DESIGN

MOTOR PERFORMANCE DATA 50 HZ - 3-PHASE DESIGN

P_N [kW]	Thrust F [N]	U_N [V]	n_N [min^{-1}]	I_N [A]	I_A [A]	η (Eff.) [%] at % load			cos φ (Pf.) at % load			T_N [Nm]	T_A [Nm]
						50	75	100	50	75	100		
2,2	6500	220	2820	9,3	49,0	71	75	75	0,6	0,74	0,82	7,42	19,87
		230	2845	9,5	51,6	69	74	75	0,52	0,66	0,77	7,37	22
		380	2820	5,4	28,3	71	75	75	0,6	0,74	0,82	7,42	19,87
		400	2845	5,5	29,8	69	74	75	0,52	0,66	0,77	7,37	22
		415	2855	5,8	30,9	65	72	74	0,47	0,61	0,72	7,33	23,67
		500	2820	4,1	21,5	71	75	75	0,6	0,74	0,82	7,42	19,87
3	6500	220	2820	12,8	69,1	73	77	77	0,61	0,74	0,82	10,16	28,80
		230	2845	13,0	72,8	70	76	76	0,53	0,67	0,77	10,06	31,93
		380	2820	7,4	39,9	73	77	77	0,61	0,74	0,82	10,16	28,80
		400	2845	7,5	42,0	70	76	76	0,53	0,67	0,77	10,06	31,93
		415	2855	7,9	43,6	67	73	75	0,47	0,61	0,72	10,04	34,33
		500	2820	5,6	30,3	73	77	77	0,61	0,74	0,82	10,16	28,80
3,7	6500	220	2815	15,3	86,1	75	79	78	0,62	0,75	0,83	12,6	37,5
		230	2840	15,5	90,6	73	77	78	0,54	0,69	0,78	12,5	41,5
		380	2815	8,8	49,7	75	79	78	0,62	0,75	0,83	12,6	37,5
		400	2840	9,0	52,3	73	77	78	0,54	0,69	0,78	12,5	41,5
		415	2850	9,3	54,3	70	76	77	0,49	0,63	0,73	12,4	44,7
		500	2815	6,7	37,8	75	79	78	0,62	0,75	0,83	12,6	37,5
4	6500	220	2820	16,7	93,7	75	78	78	0,60	0,74	0,82	13,5	39,7
		230	2840	17,2	98,7	72	77	78	0,52	0,67	0,77	13,4	44,0
		380	2820	9,7	54,1	75	78	78	0,60	0,74	0,82	13,5	39,7
		400	2840	9,9	57,0	72	77	78	0,52	0,67	0,77	13,4	44,0
		415	2855	10,4	59,1	69	75	77	0,47	0,61	0,72	13,4	47,4
		500	2820	7,3	41,1	75	78	78	0,60	0,74	0,82	13,5	39,7
5,5	6500	220	2845	21,9	127,0	77	80	79	0,66	0,79	0,85	18,5	51,0
		230	2865	21,8	133,7	75	79	79	0,59	0,73	0,81	18,3	56,5
		380	2845	12,6	73,3	77	80	79	0,66	0,79	0,85	18,5	51,0
		400	2865	12,6	77,2	75	79	79	0,59	0,73	0,81	18,3	56,5
		415	2875	12,8	80,1	73	77	79	0,54	0,68	0,77	18,2	60,9
		500	2845	9,6	55,7	77	80	79	0,66	0,79	0,85	18,5	51,0
7,5	6500	380	2830	17,2	94,3	78	80	79	0,66	0,79	0,86	25,3	65,9
		400	2855	17,1	99,3	75	79	79	0,58	0,72	0,81	25,1	73,1
		415	2865	17,6	103,0	73	78	79	0,52	0,67	0,77	25,0	78,6
		500	2830	13,1	71,7	78	80	79	0,66	0,79	0,86	25,3	65,9
9,3	6500	380	2825	21,2	108,0	77	80	79	0,65	0,78	0,86	31,4	73,8
		400	2850	21,4	113,0	75	79	79	0,56	0,71	0,81	31,1	81,8
		415	2860	22,1	118,0	72	77	78	0,47	0,58	0,76	31,0	88,0

4" SUPER STAINLESS MOTOR – 3-PHASE DESIGN

MOTOR PERFORMANCE DATA 60 HZ - 3-PHASE DESIGN

P_N [kW]	P_{MAX} [kW]	Thrust F [N]	U_N [V]	n_N [min^{-1}]	I_N [A]	I_A [A]	η (Eff.) [%] at % load			cos φ (Pf.) at % load			T_N [Nm]	T_A [Nm]
							50	75	100	50	75	100		
2,2	2,5	6500	230	3425	10,8	57,4	69	74	76	0,57	0,70	0,78	7,0	18,0
			380	3425	6,5	34,7	69	74	76	0,57	0,70	0,78	7,0	18,0
			460	3425	5,4	28,7	69	74	76	0,57	0,70	0,78	7,0	18,0
3	3,4	6500	230	3425	14,5	79,4	71	76	77	0,57	0,70	0,79	9,5	23,8
			380	3425	8,8	48,1	71	76	77	0,57	0,70	0,79	9,5	23,8
			460	3425	7,2	39,7	71	76	77	0,57	0,70	0,79	9,5	23,8
3,7	4,2	6500	230	3425	17,2	104	74	78	79	0,59	0,72	0,80	11,8	32,9
			380	3425	10,4	62,7	74	78	79	0,59	0,72	0,80	11,8	32,9
			460	3425	8,6	51,8	74	78	79	0,59	0,72	0,80	11,8	32,9
4	4,7	6500	230	3420	19,4	114	73	78	79	0,58	0,71	0,79	13,2	38,2
			380	3420	11,7	68,8	73	78	79	0,58	0,71	0,79	13,2	38,2
			460	3420	9,7	56,8	73	78	79	0,58	0,71	0,79	13,2	38,2
5,5	6,4	6500	230	3440	24,7	142	76	80	81	0,64	0,75	0,83	17,9	42,7
			380	3440	15,0	85,9	76	80	81	0,64	0,75	0,83	17,9	42,7
			460	3440	12,4	71,0	76	80	81	0,64	0,75	0,83	17,9	42,7
7,5	8,6	6500	380	3435	20,3	121	75	79	80	0,63	0,75	0,83	24,1	62,1
			460	3435	16,8	99,7	75	79	80	0,63	0,75	0,83	24,1	62,1

4" SUPER STAINLESS MOTOR – 3-PHASE DESIGN

WINDING RESISTANCE DATA 50 HZ - 3-PHASE DESIGN

P_N [kW]	U_N [V]	Stator-Ref.	U - V [Ohm]
2,2	220 - 230	326 780 902	2,5 - 3,0
	380 - 400 - 415	326 715 902	7,1 - 8,6
	500	326 792 902	11,9 - 14,5
3,0	220 - 230	326 781 902	1,5 - 1,9
	380 - 400 - 415	326 716 902	4,7 - 5,8
	500	326 793 902	8,4 - 10,2
3,7	220 - 230	326 784 902	1,2 - 1,5
	380 - 400 - 415	326 717 902	3,7 - 4,5
	500	326 796 902	6,5 - 7,9
4,0	220 - 230	326 785 902	1,1 - 1,3
	380 - 400 - 415	326 718 902	3,3 - 4,0
	500	326 797 902	5,8 - 7,1
5,5	220 - 230	326 786 902	0,9 - 1,1
	380 - 400 - 415	326 719 902	2,6 - 3,2
	500	326 798 902	4,6 - 5,7
7,5	380 - 400 - 415	326 720 902	1,9 - 2,3
	500	326 799 902	3,3 - 4,1
9,3	380 - 400 - 415	326 995 920	1,5 - 1,7

WINDING RESISTANCE DATA 60 HZ - 3-PHASE DESIGN

P_N [kW]	P_{MAX} [kW]	U_N [V]	Stator-Ref. #	U - V [Ohm]
2,2	2,5	230	326 833	1,8 - 2,2
		380	326 843	4,9 - 6,0
		460	326 715	7,1 - 8,6
3	3,4	230	326 834	1,2 - 1,4
		380	326 844	3,2 - 4,0
		460	326 716	6,5 - 8,0
3,7	4,2	230	326 835	0,9 - 1,1
		380	326 845	2,6 - 3,1
		460	326 717	3,7 - 4,5
4	4,7	230	326 836	0,8 - 1,0
		380	326 846	2,4 - 2,9
		460	326 718	3,3 - 4,0
5,5	6,4	230	326 837	0,7 - 0,8
		380	326 847	1,8 - 2,2
		460	326 719	2,6 - 3,2
7,5	8,6	380	326 848	1,3 - 1,6
		460	326 720	1,9 - 2,3

MOTOR DESIGN AND DIMENSIONS

MOTOR DESIGN HIGH THRUST 6500N 2,2 - 7,5 KW

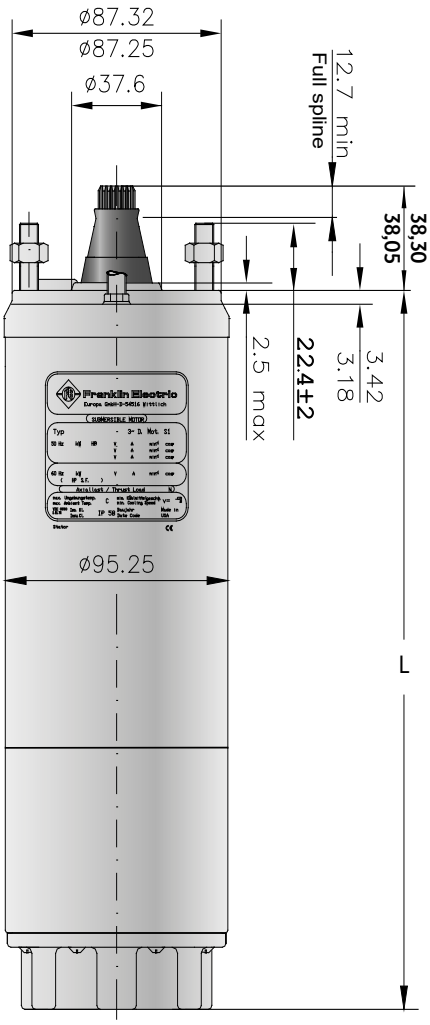

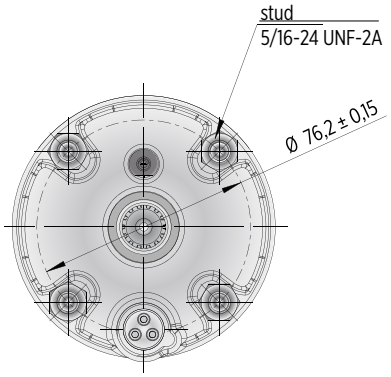

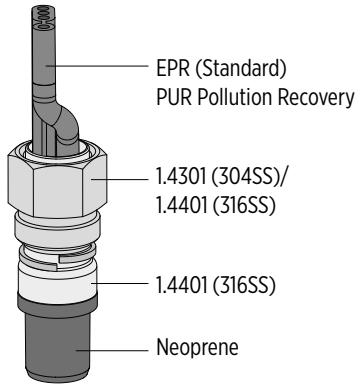

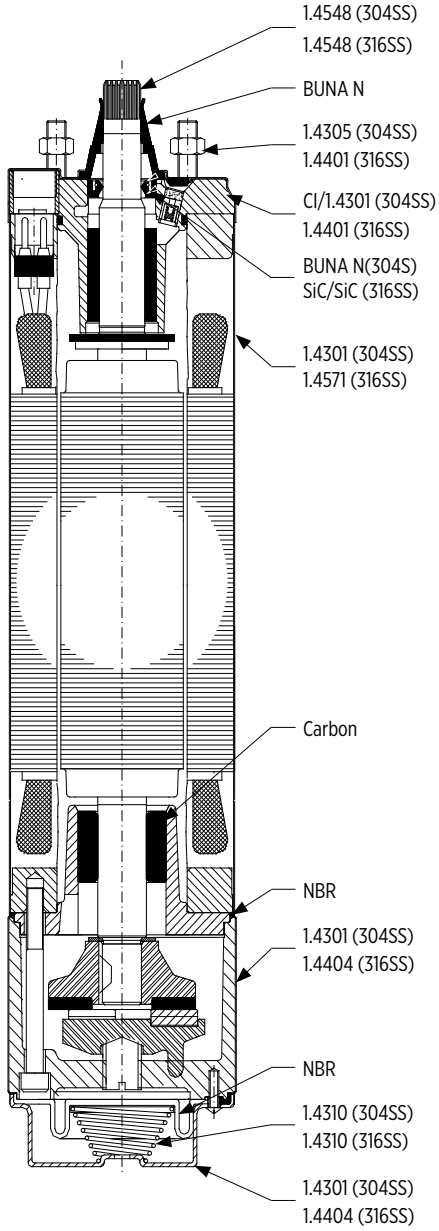

Tolerances according to NEMA MG 1-18.388

LENGTHS AND WEIGHTS - 3-PHASE DESIGN

P_N		304SS L [mm]	316SS L [mm]	304SS M [kg]	316SS M [kg]	motor with lead in single pack	
[kW]	[HP]					[mm]	304SS [kg]
2,2	3	422,2	431,4	15,0	15,5	796 x 100 x 110	16,8
3,0	4	477,2	486,4	17,0	17,5	796 x 100 x 110	18,9
3,7	5	520,2	529,4	19,1	19,6	796 x 100 x 110	20,9
4,0	5,5	543,2	552,4	20,0	20,5	796 x 100 x 110	21,8
5,5	7,5	652,5	661,7	26,6	27,1	904 x 100 x 110	28,7
7,5	10	730,5	739,7	30,6	31,1	904 x 100 x 110	32,7

MOTORDESIGN AND DIMENSION

MOTOR DESIGN HIGH THRUST 6500N 9,3 KW

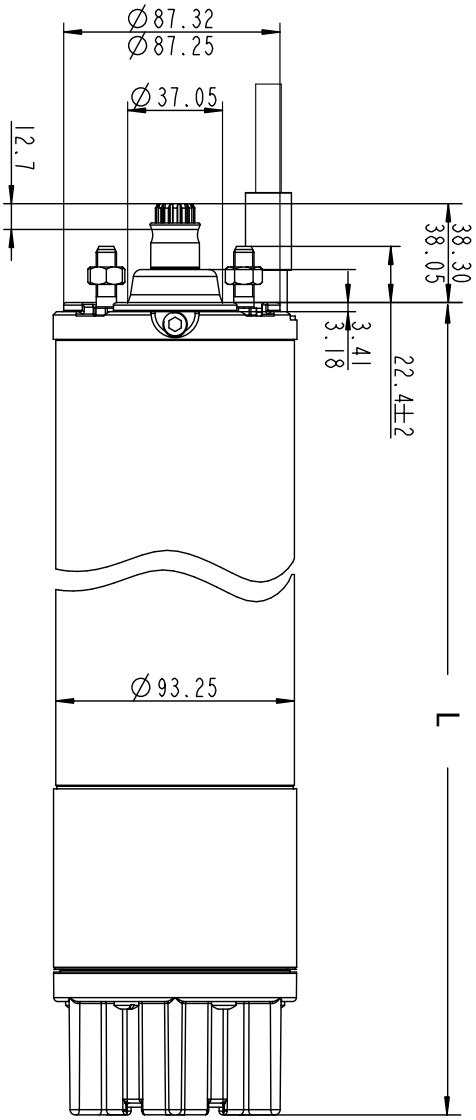

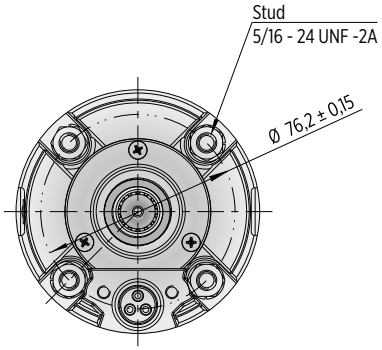

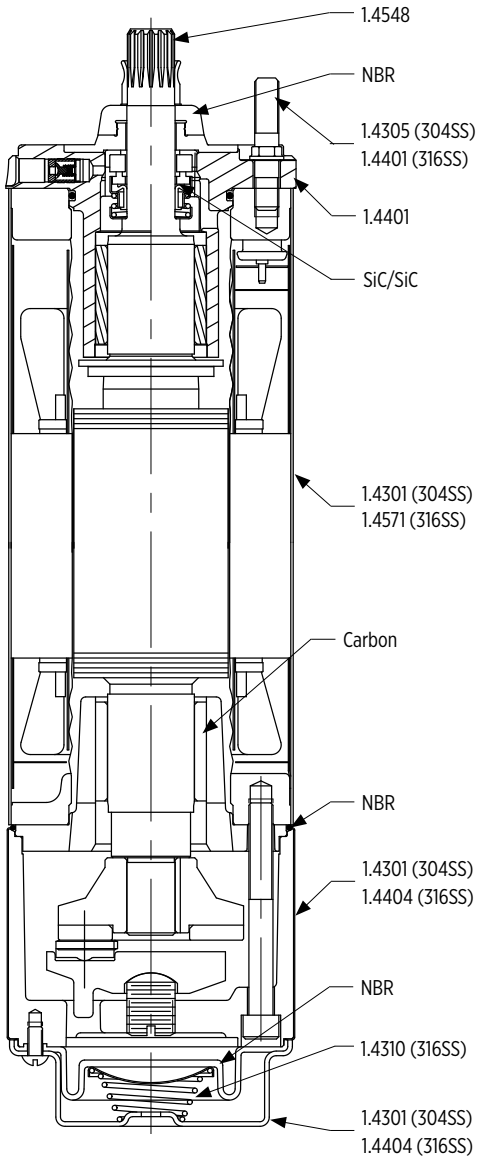

Tolerances according to NEMA MG 1-18.388

LENGTHS AND WEIGHTS - 3-PHASE DESIGN

P_N [kW]	L [mm]	M [kg]	Motor with Lead in single pack	
			[mm]	[kg]
9,3	855,1	37,9	904 x 100 x 110	41,3

MOTOR LEADS

MOTOR LEADS 3~ DESIGN DOL

3 Phase motor leads			
2,2 - 7,5 kW			
Ø [mm²]	B [mm]	B1 [mm]	H [mm]
3X1,5 + 1G1,5	16,8	10,7	5,0

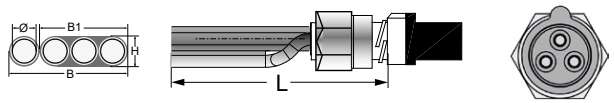

L [m]	Model numbers 304SS	Model numbers 316SS
1,5	310 113 401	310 113 501
2,5	310 113 402	310 113 502
5	310 113 405	310 113 505
10	310 113 410	310 113 510
15	310 113 415	310 113 515
20	310 113 420	310 113 520
30	310 113 430	310 113 530
40	310 113 440	310 113 540
50	310 113 450	310 113 550

3 Phase motor leads			
9,3 kW			
Ø [mm²]	B [mm]	B1 [mm]	H [mm]
3X1,5 + 1G1,5	16,8	10,7	5,0

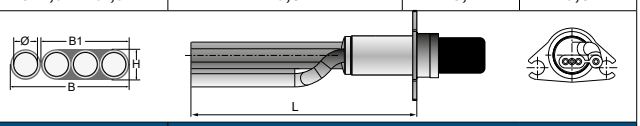

L [m]	Model numbers
2,5	310 116 502K
5	310 116 505K
10	310 116 510K
20	310 116 520K
30	310 116 530K

3-phase Pollution Recovery motor leads	
0.25 - 3.0 kW	
Ø [mm²]	D Ø [mm]
1,5	9,8

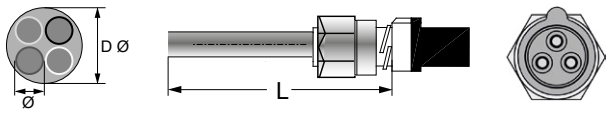

L [m]	Model numbers 316SS
1,5	310 313 501
2,5	310 313 502
10	310 113 510
20	310 313 520
30	310 313 530
40	310 313 540
50	310 313 550

3~ motors DOL

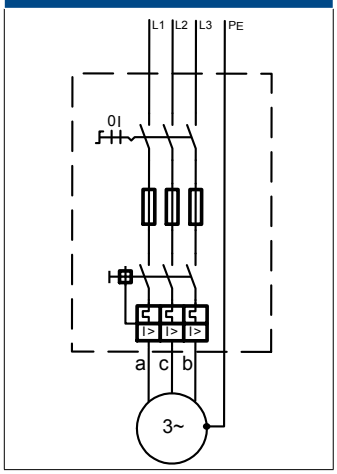

a = black | b = brown | c = grey | PE = yellow/green

Cables are designed for submerged operation. For air operation, please consult Franklin Electric.

MOTOR PART DESCRIPTION

MOTOR DESIGN 304SS 2,2 - 7,5 KW

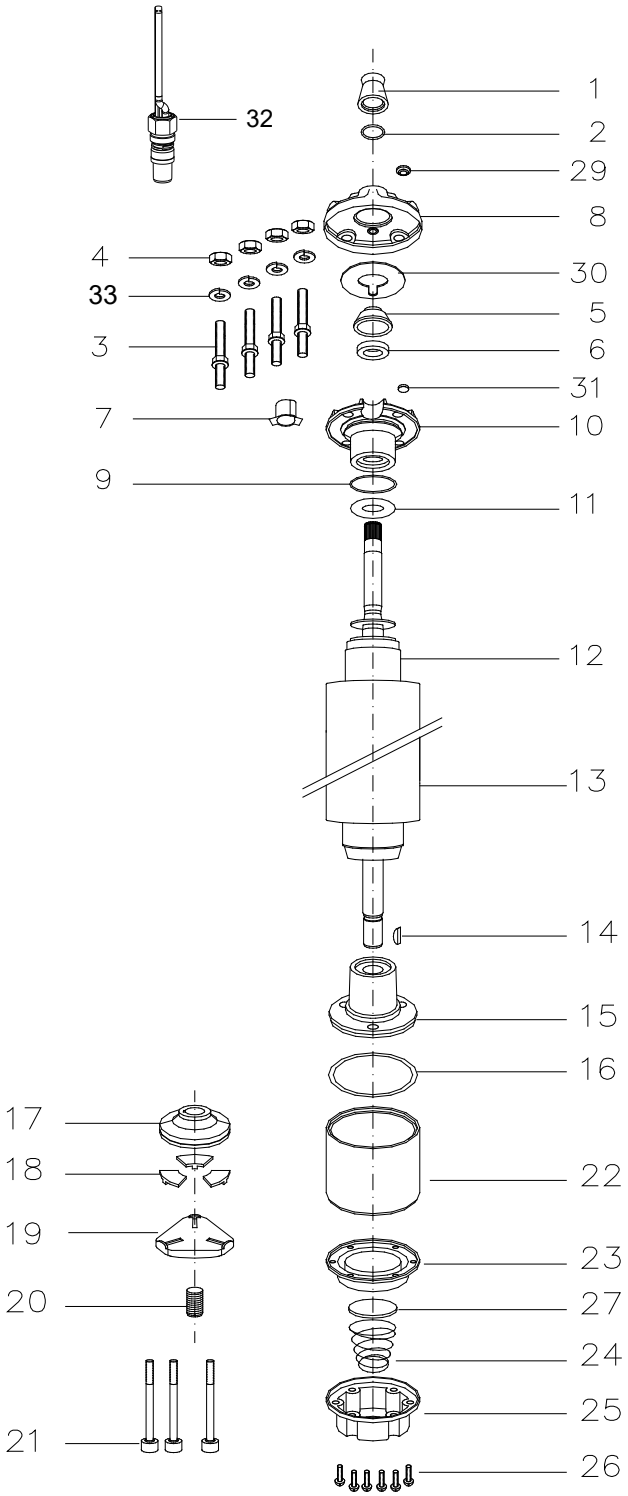

Pos.	Part Description	Qty.	Part No.
1	Protector, Spline	1	Kit B
2	Washer	1	Kit B
3	Stud	4	Kit C
4	Nut	4	Kit C
5	Seal cover	1	Kit D
6	Shaft Seal	1	Kit B+D
7	Connector boss	1	Kit D
8	Top Endbell, Cover	1	Kit D
9	O-Ring	1	Kit B+D
10	Top Endbell	1	Kit D
11	Upthrust washer 2,2 - 4,0	1	308 268 104
	Upthrust washer 5,5 - 7,5	1	308 317 901
12	Rotor	1	see page 50/51
13	Stator	1	see page 50/51
14	Woodruff key	1	275 250 104
15	Bottom Endbell	1	Kit
16	O-Ring	1	Kit B
17	Thrust disc	1	Kit A
18	Segment	1	Kit A
19	Leveling disc	1	155 660 101
20	Screw, adj.	1	151 048 103
21	Screw	3	Kit C
22	Thrust housing	1	177 378 901
23	Diaphragm	1	Kit B
24	Spring	1	151 449 101
25	Cover, Diaphragm	1	164 100 50
26	Screw	6	Kit C
27	Cup spring, Diaphragm	1	151 448 201
29	Sealing stopper	1	Kit B+D
30	Seal	1	Kit D
31	Filter	1	Kit B+D
32	Motor lead	1	see page 48
33	Lock washer	4	Kit C

MOTOR SPARE PARTS

SPARE PARTS KITS

P_N [kW]	2,2 - 7,5 kW		
2,2- 4,0kW	End bell, upper	incl. Pos.: 5, 6, 7, 8, 9, 10, 29, 30, 31	308 233 509
	End bell, lower	incl. Pos.: 15	177 379 921
5,5 - 7,5kW	End bell, upper	incl. Pos.: 5, 6, 7, 8, 9, 10, 29, 30, 31	308 434 501
	End bell, lower	incl. Pos.: 15	177 379 901
Kit A	Thrust bearing Kit 6500N	incl. Pos. 17, 18	308 700 301
Kit B	Seal Kit 304SS	incl. Pos.: 1, 2, 6, 9, 16, 23, 29, 31	308 900 351
Kit B1	Seal Kit Pollution Recovery 304SS	incl. Pos.: 1, 2, 6, 9, 16, 23, 29, 31	308 900 401
Kit C	Screw Kit 304SS	incl. Pos.: 3, 4, 21, 26, 33	308 658 351

SPARE PARTS - STATOR AND ROTOR 304SS - 3-PHASE DESIGN 50HZ

P_N [kW]	U_N [V]	Motor Model No.	Stator Model No.	Rotor
2,2	220, 230	234 756 3421/3422	305 491 361	178 163 903K
	380, 400, 415	234 726 3421/3422	305 491 381	
	500	234 796 3421/3422	305 491 401	
3,0	220, 230	234 766 3421/3422	305 491 362	178 125 903K
	380, 400, 415	234 764 3421/3422	305 491 382	
	500	234 768 3421/3422	305 491 402	
3,7	220, 230	234 757 3421/3422	305 491 363	178 126 903K
	380, 400, 415	234 727 3421/3422	305 491 383	
	500	234 797 3421/3422	305 491 403	
4,0	220, 230	234 767 3421/3422	305 491 364	178 127 903K
	380, 400, 415	234 765 3421/3422	305 491 384	
	500	234 769 3421/3422	305 491 404	
5,5	220, 230	234 758 3421/3422	305 491 365	178 133 903K
	380, 400, 415	234 728 3421/3422	305 491 385	
	500	234 798 3421/3422	305 491 405	
7,5	380, 400, 415	234 729 3421/3422	305 491 386	178 134 903K
	500	234 799 3421/3422	305 491 406	

SPARE PARTS - STATOR AND ROTOR 304SS - 3-PHASE DESIGN 60HZ

P_N [kW]	P_{MAX} [kW]	U_N [V]	Stator*	Rotor
2,2	2,5	230		178 163 903K
		380		
		460		
3,0	3,4	230		178 125 903K
		380		
		460		
3,7	4,2	230		178 126 903K
		380		
		460		
4,0	4,7	230		178 127 903K
		380		
		460		
5,5	6,4	230		178 133 903K
		380		
		460		
7,5	8,6	380		178 134 903K
		460		

* 60 Hz Stators on request

MOTOR PART DESCRIPTION

MOTOR DESIGN 316SS 2,2 - 7,5 KW

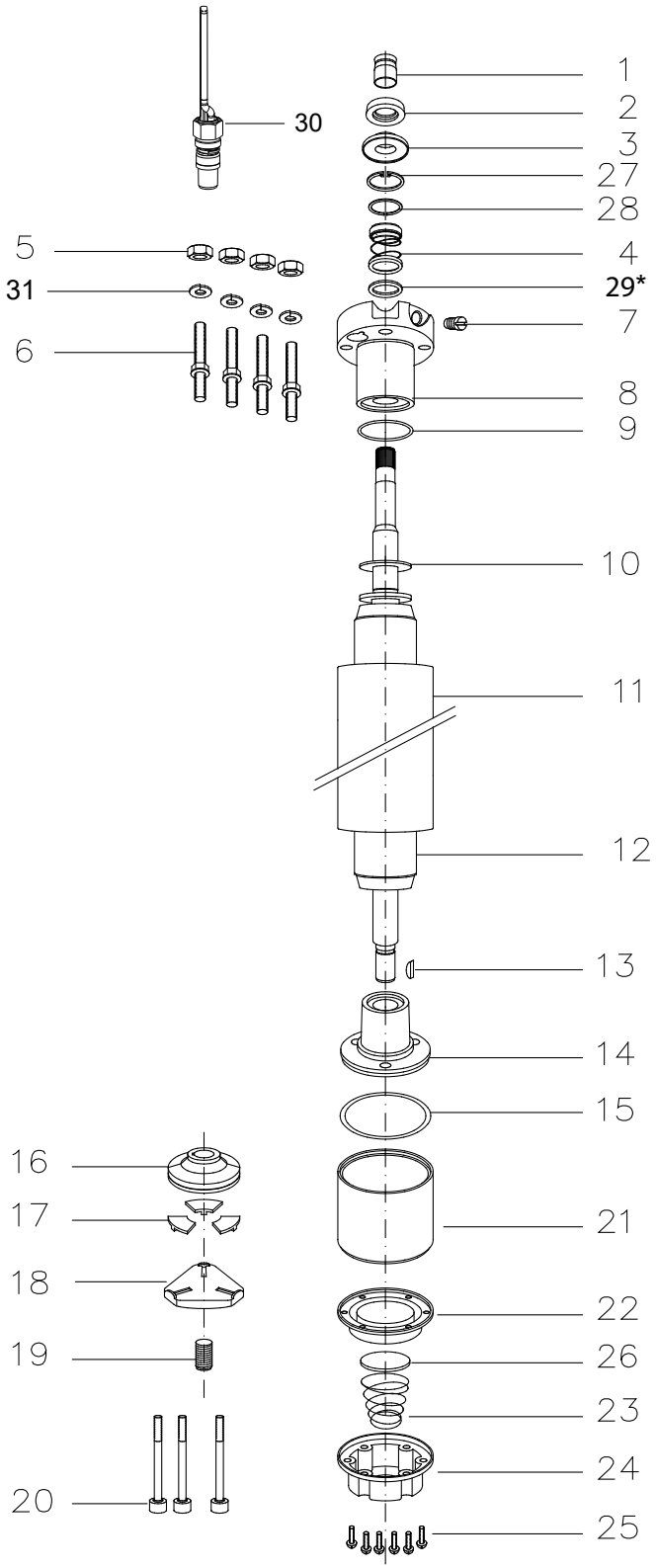

Pos.	Part Description	Qty.	Part No.
1	Protector, Spline	1	Kit C
2	Slinger	1	Kit C
3	Seal cover	1	Kit B + C
4	Shaft Seal	1	Kit B
5	Nut	4	Kit D
6	Stud	4	Kit D
7	Sealing Screw	1	308 279 903
8	Top Endbell	1	Kit
9	O-Ring	1	Kit B
10	Upthrust washer	1	Kit
11	Stator	1	see page 53/54
12	Rotor	1	see page 53/54
13	Woodruff key	1	275 250 104
14	Bottom Endbell	1	Kit
15	O-Ring	1	Kit B
16	Thrust disc	1	Kit A
17	Segments	1	Kit A
18	Leveling disc	1	155 660 101
19	Screw, adj.	1	151 048 103
20	Screw	3	Kit D
21	Thrust housing	1	177 378 951
22	Diaphragm	1	Kit B
23	Spring	1	151 449 101
24	Cover, Diaphragm	1	364 100 50
25	Screw	6	Kit D
26	Cup spring, Diaphragm	1	151 448 201
27	Ring	1	Kit B
28	Retain Ring	1	Kit B
29*	Washer	1	308 747 201
30	Motor lead	1	see page 48
31	Lock washer	4	Kit D

*** only for 2,2 - 3kW**

MOTOR SPARE PARTS

SPARE PARTS KITS

P_N [kW]	2,2 - 7,5 kW		
2,2- 4,0kW	End bell, upper 316SS - DOL	incl. Pos. 8	177 390 955
	End bell, upper 316SS - YD		177 390 956
5,5 - 7,5kW	End bell, upper 316SS - DOL	incl. Pos. 8	177 390 951
	End bell, upper 316SS - YD		177 390 953
Kit A	Thrust bearing Kit 6500N	incl. Pos. 16, 17	308 700 301
Kit B	Seal Kit 304SS	incl. Pos.: 4, 9, 15, 22	308 900 302
Kit B1	Seal Kit Pollution Recovery 304SS	incl. Pos.: 1, 2, 3, 4, 9 ,15, 22, 27, 28	308 900 402
Kit C	Sand slinger Kit 316SS Motors	incl. Pos.: 1, 2, 3	308 825 201
Kit D	Screw Kit 316SS	incl. Pos.: 5, 6, 20, 25, 31	308 658 301

SPARE PARTS - STATOR AND ROTOR 316SS - 3-PHASE DESIGN 50HZ

P_N [kW]	U_N [V]	Motor Model No.	Stator Model No.	Rotor
2,2	220, 230	234 756 3521/3522	305 491 641	178 163 913K
	380, 400, 415	234 726 3521/3522	305 491 661	
	500	234 796 3521/3522	305 491 681	
3,0	220, 230	234 766 3521/3522	305 491 642	178 125 913K
	380, 400, 415	234 764 3521/3522	305 491 662	
	500	234 768 3521/3522	305 491 682	
3,7	220, 230	234 757 3521/3522	305 491 643	178 126 913K
	380, 400, 415	234 727 3521/3522	305 491 663	
	500	234 797 3521/3522	305 491 683	
4,0	220, 230	234 767 3521/3522	305 491 644	178 127 913K
	380, 400, 415	234 765 3521/3522	305 491 664	
	500	234 769 3521/3522	305 491 684	
5,5	220, 230	234 758 3521/3522	305 491 645	178 133 913K
	380, 400, 415	234 728 3521/3522	305 491 665	
	500	234 798 3521/3522	305 491 685	
7,5	380, 400, 415	234 729 3521/3522	305 491 666	178 134 913K
	500	234 799 3521/3522	305 491 686	

SPARE PARTS - STATOR AND ROTOR 316SS - 3-PHASE DESIGN 60HZ

P_N [kW]	P_{MAX} [kW]	U_N [V]	Stator*	Rotor
2,2	2,5	230		178 163 913K
		380		
		460		
3,0	3,4	230		178 125 913K
		380		
		460		
3,7	4,2	230		178 126 913K
		380		
		460		
4,0	4,7	230		178 127 913K
		380		
		460		
5,5	6,4	230		178 133 913K
		380		
		460		
7,5	8,6	380		178 134 913K
		460		

* 60 Hz Stators on request

MOTOR PART DESCRIPTION

MOTOR DESIGN 9,3 KW

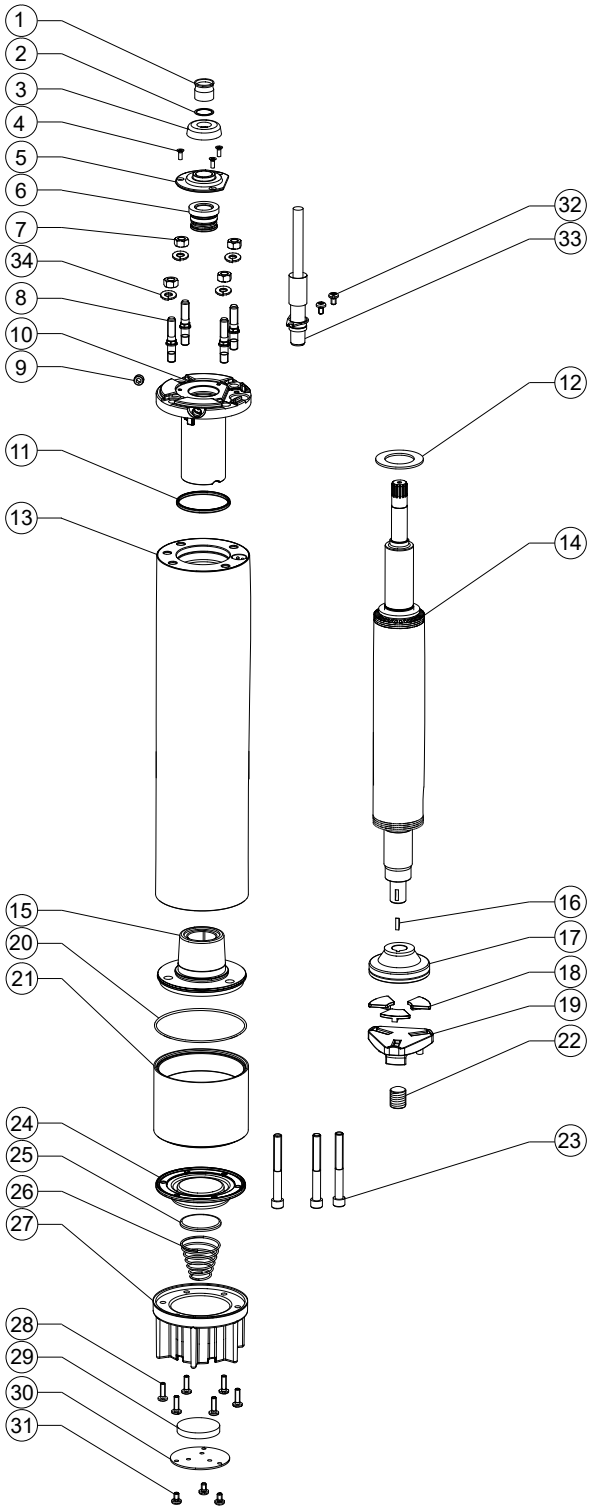

Pos.	Description	Qty.	Part Nb.
1	Protector, Spline	1	Kit B
2	Washer	1	275 542 102
3	Slinger	1	Kit B
4	Screw, Seal cover	3	Kit C
5	Seal cover	1	156 275 102
6	Shaft Seal	1	Kit B
7	Nut	4	Kit C
8	Stud	4	Kit C
9	Plug screw	1	282 230 101
10	Top Endbell	1	177 553 901
11	O-Ring	1	Kit B
12	Upthrust washer	1	308 317 901
13	Stator	1	see page 56
14	Rotor	1	see page 56
15	Bottom Endbell	1	177 379 901
16	Woodruff key	1	275 250 104
17	Thrust disc	1	Kit A
18	Segments	3	Kit A
19	Leveling disc	1	155 660 101
20	O- Ring	1	Kit B
21	Thrust housing	1	177 378 901
22	Screw, adj.	1	151 048 103
23	Screw	3	Kit C
24	Diaphragm	1	Kit B
25	Cup spring, Diaphragm	1	151 448 201
26	Spring	1	151 449 101
27	Diaphragm housing	1	177 965 101
28	Screw	6	Kit C
29	Filter	1	156 276 101
30	Cover, Diaphragm	1	156 278 101
31	Screw	3	Kit C
32	Screw	2	Kit C
33	Motor cable, 2,5m	1	see page 48
34	Lock washer	4	Kit C

MOTOR SPARE PARTS

SPARE PARTS KITS

P_N [kW]	9,3 kW		
Kit A	Thrust bearing Kit 6500N	incl. Pos.17. 18	308 700 301
Kit B	Seal Kit 304SS / 316SS	incl. Pos.: 1, 3, 6, 11, 20, 24	308 900 501
Kit C	Screw Kit 304SS / 316SS	incl. Pos.: 4; 7; 8; 23; 28; 31; 32, 34	308 658 501

SPARE PARTS - STATOR AND ROTOR - 3-PHASE DESIGN 50HZ

P_N [kW]	U_N [V]	Modellnr. Stator 304SS / 316SS	Modellnr. Rotor 304SS/316SS
9,3	380 - 415	326 995 920K	178 139 915K

* 60 Hz Stators on request

4" SUPER STAINLESS HEAT PUMP MOTORS - 3-PHASE DESIGN

STAINLESS STEEL 304

OPTIONAL STAINLESS STEEL 316

FEATURES & BENEFITS

- Suitable for operation in heating systems that extract heat from groundwater and river water (heat deep wells - or open systems).
- Three motor models cover the range from 160 to 1100Watts, each motor being capable of driving several pumps within a certain power level range
- 4" NEMA mounting design with metric studs
- Stainless steel splined shaft
- Stator shell in 316SS
- Factory filled with Franklin's non-toxic water soluble fill solution
- Max. storage temperature -15°C - + 50°C
- Liquid lubricated radial bearings and High capacity Kingsbury type thrust bearing for 100 % maintenance free operation
- Field replaceable lead using Franklin's exclusive Water Bloc technology with extended jam nut in Stainless steel
- High efficiency electrical design for low operation costs
- Drinking water approvals
- Suitable for use in water with increased salinity

SPECIFICATION

- Ratings: 0,16 kW up to 1,1 kW
- Voltage: 3~, 400 V - 50 Hz
- Thrust load: 4 kN
- Nominal ambient temperature: 30 °C with 0.08 m/s cooling flow
- Voltage tolerance: -10 % / +6 %
- Protection IP68, insulation class B
- Frequency of starts: 20 starts/ hour (with min. 3 minutes resting time)
- All motors with factory installed leads (1.50 m / 2.50 m) Special lead length up to 50 m,
- Installation orientation: Vertical / horizontal (shaft end heightened)
- Rotation counter clock wise facing shaft end (3 phase motors rotation reversible)

OPTIONS

- Built in lightning arrestors
- 316SS material design
- Special voltages

Hydrodynamic liquid lubricated radial bearings

100 % maintenance free operation

StatorSHIELD™ - Franklin encapsulation system

Franklin Electric encapsulated motors are equipped with hermetically-sealed windings. The Anti track stator resin mechanically supports the winding and provides fast heat dissipation.

Kingsbury type thrust bearing

High capacity 4 kN Kingsbury type thrust bearing for 100 % maintenance free operation

Pressure-equalizing diaphragm

4" SUPER STAINLESS HEAT PUMP MOTORS - 3- PHASE DESIGN

MODEL NUMBERS - SOLAR MOTORS 60 HZ

P_N [kW]	U_N [V]	Digit 1 - 6	Digit 7 - 10			
			Standard 304SS		Standard 316SS	
			Single pack with lead*	40 motors packing unit	Single pack with lead*	40 motors packing unit
0,16 - 0,32	400	234 870	6721L	6721	6821L	6821
0,30 - 0,60	400	234 871	6721L	6721	6821L	6821
0,55 - 1,1	400	234 872	6721L	6721	6821L	6821

*lead lengths motors „L“ : up to 1.5 kW with 1.5 m preassembled cable

MOTOR PERFORMANCE AND MECHANICAL DATA 50 HZ - 3-PHASE

P_N [kW]	Thrust F [N]	U_N [V]	n_N [min^{-1}]	I_N [A]	I_A [A]	η (Eff.) [%]	cos φ (Pf.)	T_N [Nm]	T_A [Nm]	L [mm]	Weight [kg]
0,16 - 0,32	4000	400	2910	0,56	3,7	64	0,68	0,52	2,4	237,2	5,6
			2860	0,7		70	0,78	0,84			
			2820	0,8		70	0,83	1,08			
0,30 - 0,60	4000	400	2920	0,95	7,1	71	0,65	0,98	4,8	271,2	7,3
			2870	1,2		74	0,78	1,56			
			2830	1,4		75	0,84	2,02			
0,55 - 1,1	4000	400	2910	1,7	12,2	75	0,67	1,80	8,5	297,2	8,6
			2870	1,9		76	0,76	2,48			
			2800	2,5		76	0,85	2,74			

MOTOR DESIGN

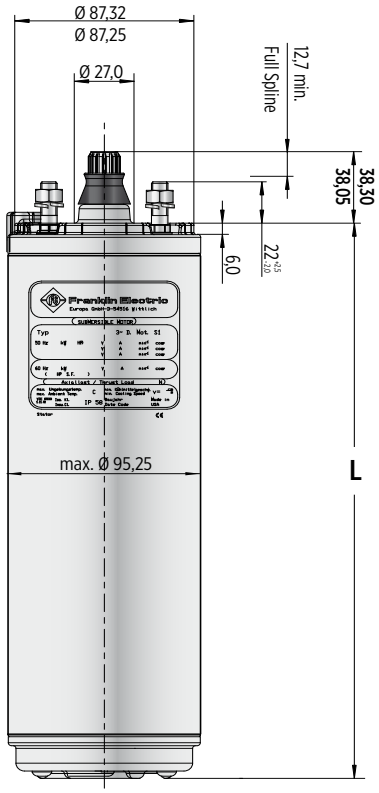

Tolerances according to NEMA MG 1-18.388

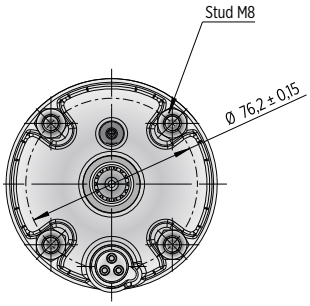

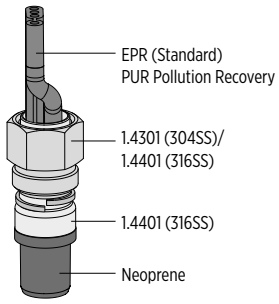

MOTOR LEAD - 3-PHASEN DESIGN

3-Phasen Motor lead			
0,16 - 1,1 kW			
Ø [mm^2]	B [mm]	B1 [mm]	H [mm]
3X1,5 + 1G1,5	16,8	10,7	5,0

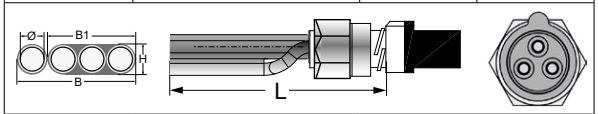

L [m]	Model numbers 304SS	Model numbers 316SS
1,5	310 113 401	310 113 501
2,5	310 113 402	310 113 502
5	310 113 405	310 113 505
10	310 113 410	310 113 510
15	310 113 415	310 113 515
20	310 113 420	310 113 520
30	310 113 430	310 113 530
40	310 113 440	310 113 540
50	310 113 450	310 113 550

3- Motor DOL

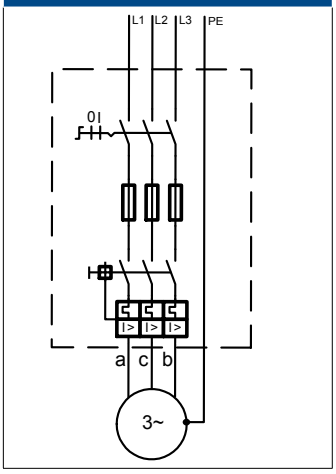

a = black | b = brown | c = grey | PE = yellow/green

MOTOR PART DESCRIPTION

MOTOR DESIGN 0,16 UP TO 1,1 KW

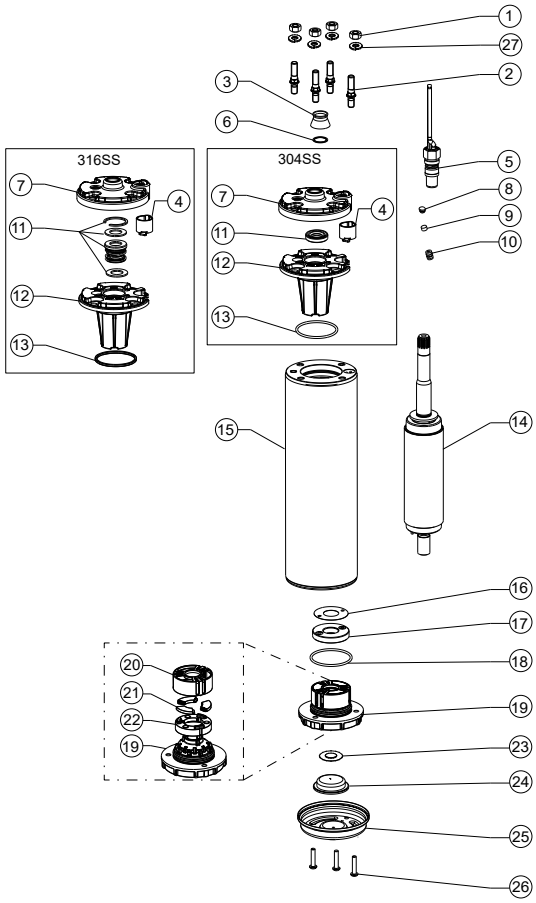

Pos.	Part Description	Qty.	Part No.
1	Nut	4	Kit C
2	Stud	4	Kit C
3	Protector, Spline	1	Kit B
4	Connector boss	1	151 820 103
5	Motor Lead	1	see page 58
6	Washer	1	Kit B
7	Top Endbell, Cover 304SS	1	150 262 151
	Top Endbell, Cover 316SS*	1	150 262 251
8	Filter plug	1	Kit
9	Filter	1	Kit
10	Valve	1	Kit
11	Shaft Seal	1	Kit B
12	Top Endbell	1	KIt
13	O-Ring	1	Kit B
14	Rotor	1	see page 59
15	Stator	1	see page 59
16	Level washer	1	Kit A2
17	Thrust disk assy	1	Kit A2
18	O-Ring	1	Kit B / Kit A2
19	Bottom Endbell	1	Kit A2
20	Bearing cage	1	Kit A2
21	Segments	3	Kit A2
22	Gasket	1	Kit A2
23	Diaphragm washer	1	151 314 101 / Kit A2
24	Diaphragm	1	Kit B / KitA2
25	Bottom Endbell Cover 304SS	1	156 414 201 / Kit A2
	Bottom Endbell Cover 316SS*	1	156 414 301 / Kit A2
26	Screw, Cover	3	Kit C
27	Lock washer	4	Kit C

SPARE PARTS KITS

P_N [kW]	0,16 - 1,1 kW		
Kit A1	Top Endbell 304SS	incl. pos. 4, 7, 8, 9, 10, 11 , 12, 13	308 462 902
	Top Endbell 316SS*		308 462 952
Kit A2	Bottom Endbell 304SS incl. Thrust Bearing Kit 4000N	incl. pos. 16 - 22	308 464 911
	Bottom Endbell 316SS incl. Thrust Bearing Kit 4000N*		308 464 912
Kit B	Seal Kit Standard 304SS	incl. pos. 3, 6, 8, 9, 11, 13, 18, 23, 24	308 650 201
	Seal Kit Standard 316SS*		308 650 251
	Seal Kit Pollution Recovery 304SS		308 650 202
	Seal Kit Pollution Recovery 316SS*		308 650 252
Kit C	Fastener Kit 304SS	incl. pos. 1, 2, 26, 27	308 656 202
	Fastener Kit 316SS*		308 656 252

SPARE PARTS - STATOR AND ROTOR

P_N [kW]	U_N [V]	**Motor Nb.** 304SS	**Motor Nb.** 316SS	Stator Nb.. 304SS / 316SS	Rotor Nb. 304SS	Rotor Nb. 316SS
0,16 - 0,32	400	234 870 6721L	234 870 6821L	305 *** ***	178 164 901K	178 164 951K
0,30 - 0,60	400	234 871 6721L	234 871 6821L	305 *** ***	178 164 903K	178 164 953K
0,55 - 1,1	400	234 872 6721L	234 872 6821L	305 *** ***	178 164 905K	178 164 955K

4" SUPER STAINLESS SOLAR MOTOR – 3-PHASE DESIGN

OPTIONAL

STAINLESS STEEL 304

STAINLESS STEEL 316

FEATURES & BENEFITS

- Suitable for operation in solar applications, ideally with the Franklin Electric SolarPAK complete system.
- 4" NEMA mounting design with metric studs
- Stainless steel splined shaft
- Stator shell in 316SS
- Factory filled with Franklin's non-toxic water soluble fill solution
- Max. storage temperature -15°C - + 50°C
- Liquid lubricated radial bearings and High capacity Kingsbury type thrust bearing for 100 % maintenance free operation
- Field replaceable lead using Franklin's exclusive Water Bloc technology with extended jam nut in Stainless steel
- High efficiency electrical design for low operation costs
- Drinking water approvals
- Suitable for use in water with increased salinity

SPECIFICATION

- Ratings: 0,75 kW / 1,1 kW
- Voltage: 3~, 100 V / 200 V - 60 Hz
- Thrust load: 4 kN
- Nominal ambient temperature: 30 °C with 0.08 m/s cooling flow
- Voltage tolerance: -10 % / +6 % (50 Hz), +/- 10% (60 Hz)
- Protection IP68, insulation class B
- Frequency of starts: 20 starts/ hour (with min. 3 minutes resting time)
- All motors with factory installed leads (1.50 m / 2.50 m) Special lead length up to 50 m,
- Installation orientation: Vertical / horizontal (shaft end heightened)
- Rotation counter clock wise facing shaft end (1 phase motors CW upon request; 3 phase motors rotation reversible)

OPTIONS

- Built in lightning arrestors
- 316SS material design
- Special voltages

Hydrodynamic liquid lubricated radial bearings

100 % maintenance free operation

StatorSHIELD™ - Franklin encapsulation system

Franklin Electric encapsulated motors are equipped with hermetically-sealed windings. The Anti track stator resin mechanically supports the winding and provides fast heat dissipation.

Kingsbury type thrust bearing

High capacity 4 kN Kingsbury type thrust bearing for 100 % maintenance free operation

Pressure-equalizing diaphragm

4" SUPER STAINLESS SOLAR MOTORS - 3- PHASE DESIGN

MODEL NUMBERS - SOLAR MOTORS 60 HZ

P_N [kW]	U_N [V]	Digit 1 - 6	Digit 7 - 10	
			Single pack with lead*	40 motors packing unit
0,75	100	234 802	6721L	6721
1,1	200	234 703	6721L	6721

*lead lengths motors „L" : up to 1.5 kW with 1.5 m preassembled cable

SYSTEM MODEL NUMBERS 60 HZ - SOLAR MOTORS & DRIVETECH MINI CONTROLLER

P_N [kW]	U_N [V]	Set Motor mit DriveTech mini Solar Controller*	DriveTech mini Controller*	
			Controller Modell	Model number
0,75	100	308 752 670	FD Solar 0.55 kW N4	581 013 000 86C-62IS000
1,1	200	308 754 670	FD Solar 1.10 kW N4	581 014 200 86C-62IS002

*More information about the DriveTech mini Controller and Accessories in the catalog section 4"HES Systems

MOTOR PERFORMANCE DATA 60 HZ - 3-PHASE

P_N [kW]	Thrust F [N]	U_N [V]	n_N [min^{-1}]	I_N [A]	I_A [A]	η (Eff.) [%] at % Last			cos φ (Pf.) at % Last			T_N [Nm]	T_A [Nm]
						50	75	100	50	75	100		
0,75	4000	100	3370	6,9	34,0	68	73	74	0,71	0,79	0,85	2,1	5,0
1,1	4000	200	3400	5,0	26,0	72	76	76	0,70	0,78	0,83	3,1	7,0

WINDINGS RESISTANCE 60 HZ

P_N [kW]	U_N [V]	Stator-Ref.	Main phase [Ohm]
0,75	100	327 216 945	1,3 - 1,6
1,1	200	327 051 945	3,1 - 3,7

MOTOR LEAD - 3-PHASEN DESIGN

3-Phasen Motor lead			
0,75 - 1,1 kW			
Ø [mm^2]	B [mm]	B1 [mm]	H [mm]
3X1,5 + 1G1,5	16,8	10,7	5,0

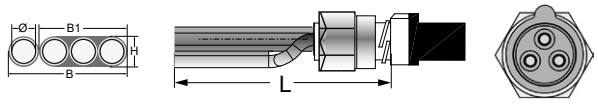

L [m]	Model numbers 304SS	Model numbers 316SS
1,5	310 113 401	310 113 501
2,5	310 113 402	310 113 502
5	310 113 405	310 113 505
10	310 113 410	310 113 510
15	310 113 415	310 113 515
20	310 113 420	310 113 520
30	310 113 430	310 113 530
40	310 113 440	310 113 540
50	310 113 450	310 113 550

Cables are designed for submerged operation. For air operation, please consult Franklin Electric.

3~ Motor DOL

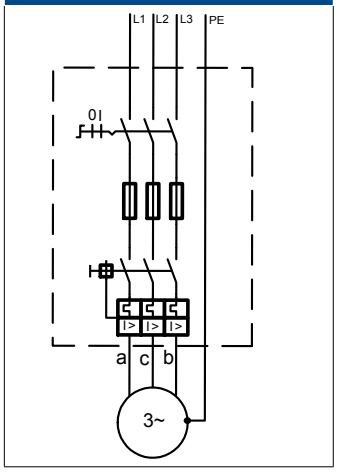

a = black | b = brown | c = grey | PE = yellow/green

MOTOR DESIGN AND DIMENSIONS

MOTOR DESIGN 304SS 4000N 0,75 & 1,1 KW

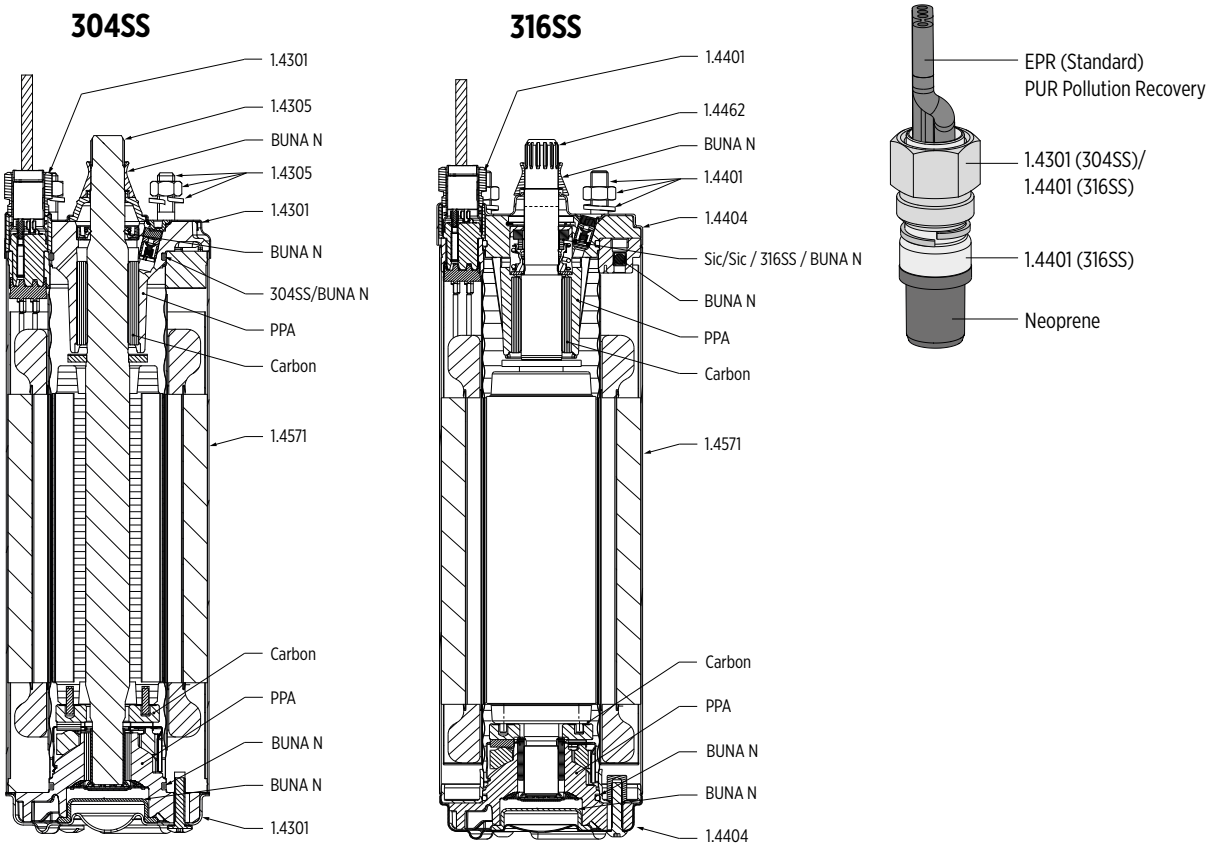

LENGTHS AND WEIGHTS - 3-PHASE DESIGN

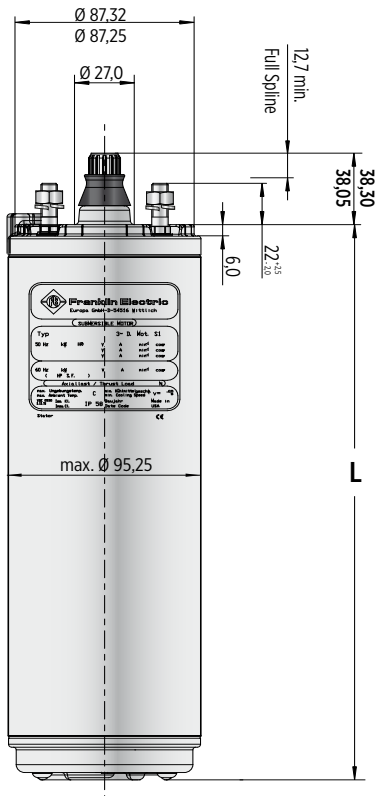

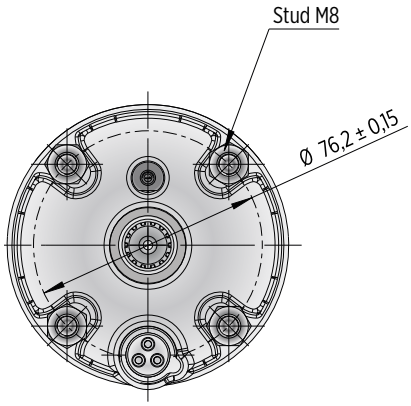

P_N		L [mm]	M [kg]	Motor with Lead in single pack	
[kW]	[HP]			[mm]	[kg]
0,75	1,00	271,2	7,25	530 x 100 x 110	8,0
1,10	1,50	297,2	8,55	530 x 100 x 110	9,3

Tolerances according to NEMA MG 1-18.388

MOTOR PART DESCRIPTION

MOTOR DESIGN 0,75 & 1,1 KW

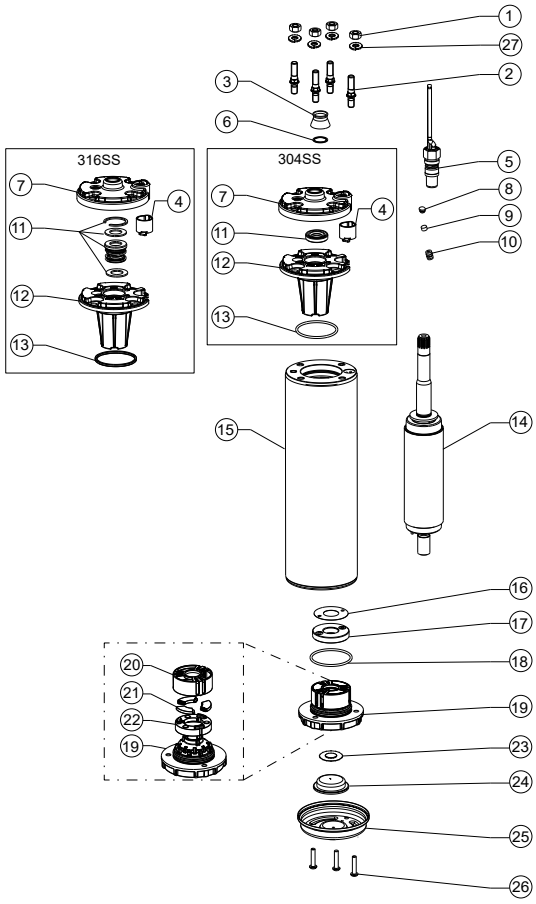

Pos.	Part Description	Qty.	Part No.
1	Nut	4	Kit C
2	Stud	4	Kit C
3	Protector, Spline	1	Kit B
4	Connector boss	1	151 820 103
5	Motor Lead	1	see page 61
6	Washer	1	Kit B
7	Top Endbell, Cover 304SS	1	150 262 151
	Top Endbell, Cover 316SS*	1	150 262 251
8	Filter plug	1	Kit
9	Filter	1	Kit
10	Valve	1	Kit
11	Shaft Seal	1	Kit B
12	Top Endbell	1	KIt
13	O-Ring	1	Kit B
14	Rotor	1	see page 63
15	Stator	1	see page 63
16	Level washer	1	Kit A2
17	Thrust disk assy	1	Kit A2
18	O-Ring	1	Kit B / Kit A2
19	Bottom Endbell	1	Kit A2
20	Bearing cage	1	Kit A2
21	Segments	3	Kit A2
22	Gasket	1	Kit A2
23	Diaphragm washer	1	151 314 101 / Kit A2
24	Diaphragm	1	Kit B / KitA2
25	Bottom Endbell Cover 304SS	1	156 414 201 / Kit A2
	Bottom Endbell Cover 316SS*	1	156 414 301 / Kit A2
26	Screw, Cover	3	Kit C
27	Lock washer	4	Kit C

SPARE PARTS KITS

P_N [kW]	0.75 / 1,1 kW		
Kit A1	Top Endbell 304SS	incl. pos. 4, 7, 8, 9, 10, 11 , 12, 13	308 462 902
	Top Endbell 316SS*		308 462 952
Kit A2	Bottom Endbell 304SS incl. Thrust Bearing Kit 4000N	incl. pos. 16 - 22	308 464 911
	Bottom Endbell 316SS incl. Thrust Bearing Kit 4000N*		308 464 912
Kit B	Seal Kit Standard 304SS	incl. pos. 3, 6, 8, 9, 11, 13, 18, 23, 24	308 650 201
	Seal Kit Standard 316SS*		308 650 251
	Seal Kit Pollution Recovery 304SS		308 650 202
	Seal Kit Pollution Recovery 316SS*		308 650 252
Kit C	Fastener Kit 304SS	incl. pos. 1, 2, 26, 27	308 656 202
	Fastener Kit 316SS*		308 656 252

SPARE PARTS - STATOR AND ROTOR

P_N [kW]	U_N [V]	**Motor Nb.** 304SS	**Motor Nb.** 316SS	Stator Nb.. 304SS / 316SS	Rotor Nb. 304SS	Rotor Nb. 316SS
0,75	100	234 802 6721L	234 802 6821L	305 491 ***	178 164 903K	178 164 953K
1,1	200	234 703 6721L	234 703 6821L	305 491 ***	178 164 905K	178 164 955K

4" 3~ ENCAPSULATED PERMANENT MAGNET MOTOR

SPECIFICATION

- Motors for operation with Variable frequency drive (VFD)
- 4" NEMA mounting design
- Stainless steel splined shaft
- StatorShield™ - Franklin encapsulation system
- Factory filled with Franklin's non-toxic water soluble fill solution
- Max. storage temperature 0°C - + 50°C
- High-capacity Kingsbury type water lubricated thrust bearing
- Field replaceable lead using Franklin's exclusive Water Bloc technology
- Pressure-equalizing diaphragm
- High efficiency electrical design for low operation costs
- All motors manufactured in ISO 9001 & 14001 certified plants and 100% tested
- Suitable for use in water with increased salinity (Brackish water version optional)
- Drinking water approvals

- Motor ratings: 0.55 - 3.0 kW; Thrust load; 4 kN
- Motor ratings: 3.0 - 7.5 kW; Thrust load: 6.5 kN
- Voltage: 220 V / 380 V (100 Hz - 3000 U/min; 120 Hz - 3600 U/min)
- Voltage tolerance: ± 10 % U_N
- Nominal ambient temperature: 30 °C with 0.08 m/s cooling flow
- Protection IP68 / insulation class B
- Frequency of starts: max. 20 ; with 3 min. rest period
- Motors installation orientation: Vertical / horizontal (shaft end heightened)
- All motors with factory installed leads: ≤ 2.2 kW: 1.50 m; ≥ 3 kW: 2.50 m, special lead lengths on request

STAINLESS STEEL 304

STAINLESS STEEL 316

3~ 304SS / 316SS MODEL NUMBERS 220 V / 100 & 120 HZ**

P_N [kW]	U_N [V]	Thrust F [N]	f [Hz]	Digit 1 - 6	Digit 7 - 10	
					Standard 304SS	Standard 316SS
					Single pack with lead*	Single pack with lead*
0.55 - 1.1	220	4000	100	234 071	6721L	6821L
			120	234 051		
1.1 - 2.2	220	4000	100	234 072	6721L	6821L
			120	234 052		
2.2 - 3.0	220	4000	100	234 073	6721L	6821L
			120	234 053		
3.0 - 4.0	220	6500	100	234 074	3421L	3521L
			120	234 054		

3~ 304SS / 316SS MODEL NUMBERS 380 V / 100 HZ**

P_N [kW]	U_N [V]	Thrust F [N]	Digit 1 - 6	Digit 7 - 10	
				Standard 304SS	Standard 316SS
				Single pack with lead*	Single pack with lead*
1.1 - 2.2	380	4000	234 062	6721L	6821L
2.2 - 3.0	380	4000	234 063	6721L	6821L
3.0 - 4.0	380	6500	234 064	3421L	3521L
4.0 - 7.5	380	6500	234 066	3421L	3521L

* Lead lengths Motors "L" : with pre-mounted cable 1.5m/ 6500N- 2,5m
** PM motors are to be operated by Variable frequency drive (VFD)

4" 3~ ENCAPSULATED PERMANENT MAGNET MOTOR

MOTOR PERFORMANCE DATA 220 V / 100 HZ

System model no.	Motor model no.	P_N [kW]	Thrust F [N]	U_N [V]	n [min-1]	I_N [A]	I_A/I_N [A]	η [%]	cos phi	T_N [Nm]	T_A/T_N* [Nm]
308 071 001	234 071 ***	0.55	4000	220	3000	1.8	1	85.1	0.95	1.8	1
		0.75				2.4		85.6	0.97	2.4	
		1.1				3.8		83.5	0.99	3.5	
308 072 001	234 072 ***	1.1	4000	220	3000	3.4	1	86.4	0.96	3.5	1
		1.5				4.8		88.0	0.97	4.8	
		2.2				7.0		87.0	0.99	7.0	
308 073 001	234 073 ***	2.2	4000	220	3000	6.9	1	90.3	0.96	7.0	1
		3.0				9.4		90.2	0.97	9.6	
308 074 001	234 074 ***	3.0	6500	220	3000	10.2	1	90.7	0.94	9.6	1
		3.7				12.0		91.0	0.96	11.8	
		4.0				13.0		91.0	0.97	12.7	

MOTOR PERFORMANCE DATA 220 V / 120 HZ

System model no.	Motor model no.	P_N [kW]	Thrust F [N]	U_N [V]	n [min-1]	I_N [A]	I_A/I_N [A]	η [%]	cos phi	T_N [Nm]	T_A/T_N* [Nm]
	234 051 ****	0,55	4000	220	3600	2,0	1	85,1	0,95	1,8	1
		0,75				2,6		85,6	0,97	2,4	
		1,1				3,8		83,5	0,99	3,5	
	234 052 ****	1,1	4000	220	3600	4,1	1	86,4	0,94	3,5	1
		1,5				5,0		88,0	0,95	4,8	
		2,2				7,1		87,0	0,96	7,0	
	234 053 ****	2,2	4000	220	3600	6,9	1	90,3	0,96	7,0	1
		3,0				9,4		90,2	0,97	9,6	
	234 054 ****	3,0	6500	220	3600	9,7	1	90,7	0,94	9,6	1
		3,7				11,5		91,0	0,96	11,8	
		4,0				12,5		91,0	0,97	12,7	

MOTOR PERFORMANCE DATA 380 V / 100 HZ

System model no.	Motor model no.	P_N [kW]	Thrust F [N]	U_N [V]	n [min-1]	I_N [A]	I_A/I_N [A]	η [%]	cos phi	T_N [Nm]	T_A/T_N* [Nm]
308 062 00X	234 062 ***	1.1	4000	380	3000	2.2	1	86.4	0.95	3.5	1
		1.5				2.8		88.0	0.96	4.8	
		2.2				4.0		87.0	0.97	7.0	
308 063 00X	234 063 ***	2.2	4000	380	3000	4.0	1	89.6	0.95	7.0	1
		3.0				5.4		90.0	0.97	9.6	
308 064 00X	234 064 ***	3.0	6500	380	3000	5.7	1	89.7	0.96	9.6	1
		3.7				6.7		90.2	0.97	11.8	
		4.0				7.3		90.2	0.98	12.7	
308 066 00x	234 066 ***	4.0	6500	380	3000	7.3	1	90.7	0.95	12.7	1
		5.5				9.7		91.0	0.95	17.5	
		7.5				13.1		90.5	0.96	23.9	

Performance data are based on measurements with Franklin Electric original equipment.
*Since this is an integrated system (motor plus electronics) these figures relate to VFD input.

4" 3~ ENCAPSULATED PERMANENT MAGNET MOTOR

EFFICIENCY CURVE AT 3000 RPM

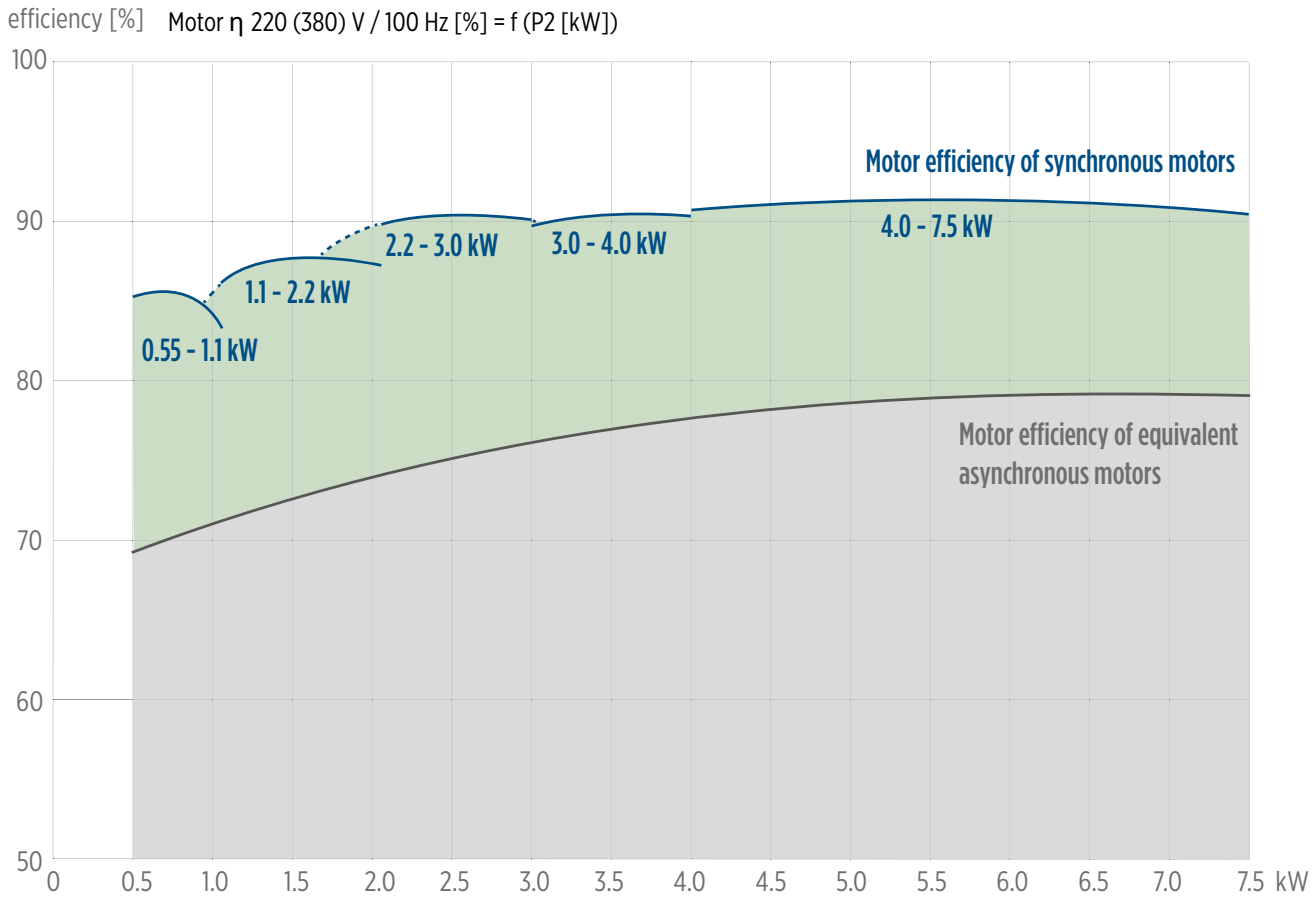

MOTOR LEADS / ELECTRICAL CONNECTION 3~ MOTORS

3~ PM motors	Motor lead*			
	0.55 - 7.5 kW			
	Ø [mm]	B [mm]	B1 [mm]	H [mm]
	3 x 1.5 + 1G 1.5	16.8	10.7	5.0

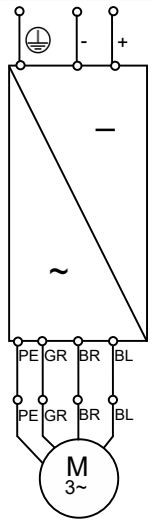

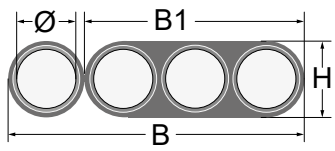

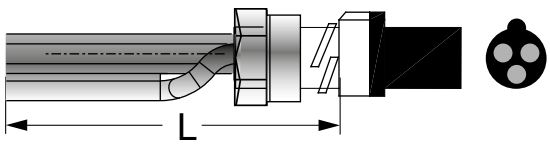

L [m]	304SS / 316SS
1.50	310 178 501
2.50	310 113 502
5	310 113 505
10	310 113 510
15	310 113 515
20	310 113 520

*Cables are designed for submerged operation. For air operation, please consult Franklin Electric.

4" 3~ ENCAPSULATED PERMANENT MAGNET MOTOR

WINDING RESISTANCE 220 V / 100 HZ

P_N [kW]	U_N [V]	Stator Ref.	U - V (Ohm)	Rotor Ref.
0.55 - 1.1	220	327 460 ***	7.7 - 8.14	178 172 901
1.1 - 2.2	220	327 461 ***	2.30 - 2.40	178 172 903
2.2 - 3.0	220	327 462 ***	1.45 - 1.54	178 172 904
3.0 - 4.0	220	327 463 ***	0.78 - 0.82	178 173 921

WINDING RESISTANCE 380 V / 100 HZ

P_N [kW]	U_N [V]	Stator Ref.	U - V (Ohm)	Rotor Ref.
1.1 - 2.2	380	327 451 ***	8.0 - 8.4	178 172 903
2.2 - 3.0	380	327 452 ***	4.4 - 4.62	178 172 904
3.0 - 4.0	380	327 453 ***	2.7 - 2.9	178 173 921
4.0 - 7.5	380	327 454 ***	1.88 - 2.07	178 141 901

MOTOR DIMENSIONS

0.55 - 3.0 kW [4000 N]

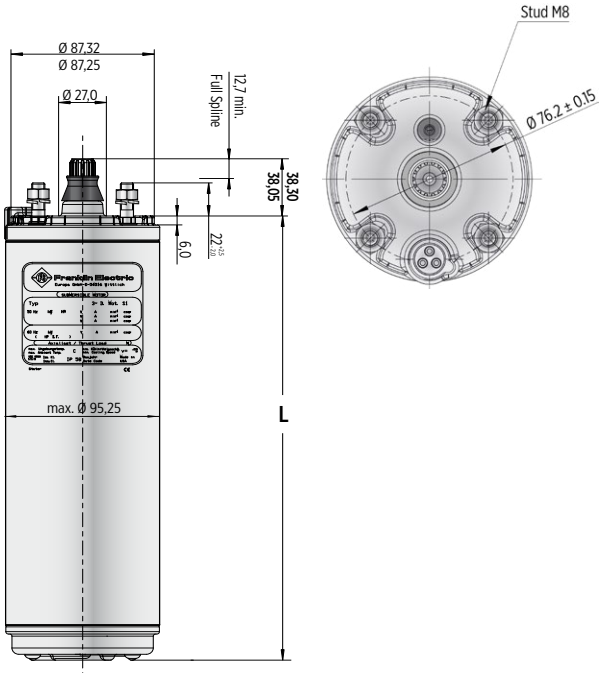

3.0 - 7.5 kW [6500 N]

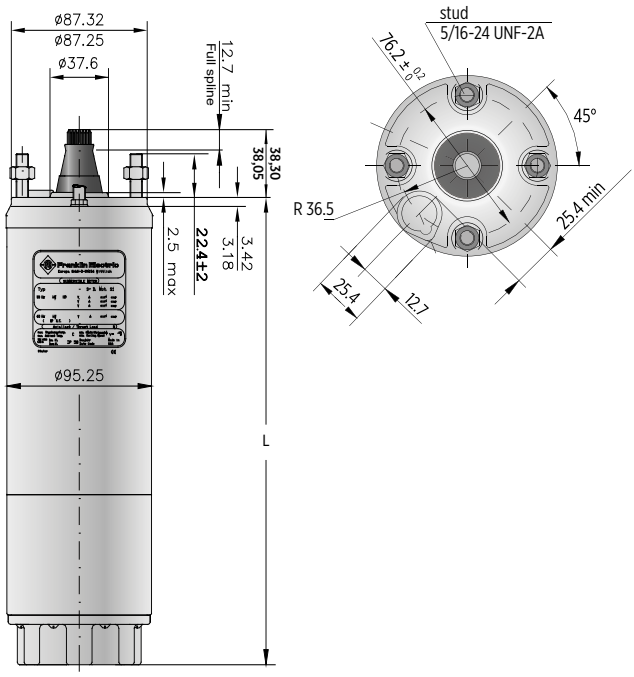

P_N [kW]	U_N [V]	Thrust F [N]	L [mm]	M [kg]	Motor with lead in single pack	
					[mm]	[kg]
0.55 - 1.1	220	4000	218	5.2	530 x 100 x 110	6
1.1 - 2.2	220	4000	263	7.2	530 x 100 x 110	8
2.2 - 3.0	220	4000	353	9.2	560 x 100 x 110	10
3.0 - 4.0	220	6500	429	15.2	560 x 100 x 110	16
1.1 - 2.2	380	4000	263	7.2	560 x 100 x 110	8
2.2 - 3.0	380	4000	353	9.2	560 x 100 x 110	10
3.0 - 4.0	380	6500	429	15.2	796 x 100 x 110	16
7.5	380	6500	531	19.8	796 x 100 x 110	20

tolerances according to NEMA MG 1-18.388

4" 3~ ENCAPSULATED PERMANENT MAGNET MOTOR

MOTOR MATERIALS 4000 N

304SS

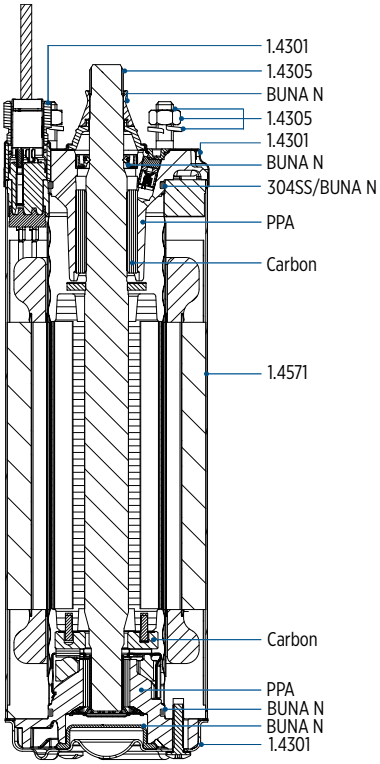

316SS

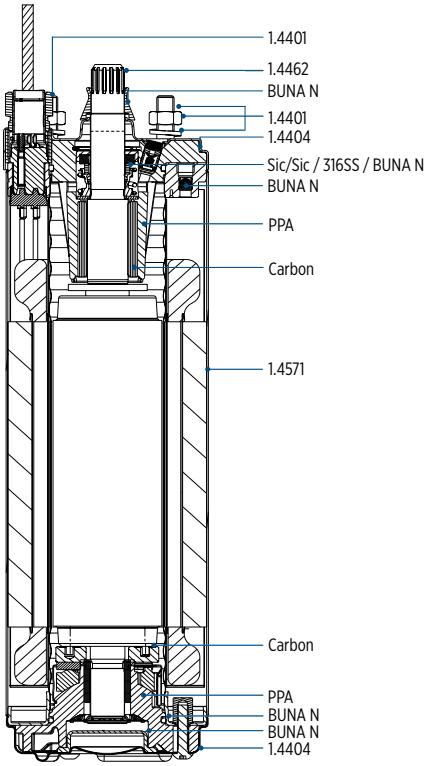

MOTOR MATERIALS HIGH THRUST 6500 N

304SS / 316SS

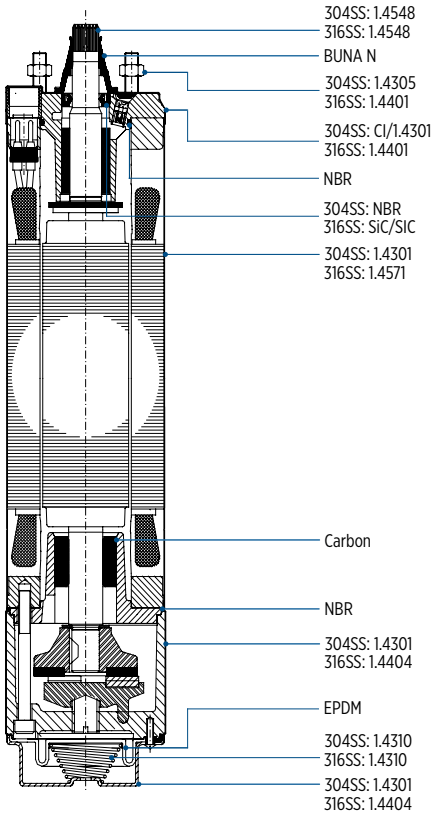

4" 3~ ENCAPSULATED PM MOTOR SPARE PARTS 0.55 - 3.0 KW / 4000 N

MOTOR PARTS DESCRIPTION

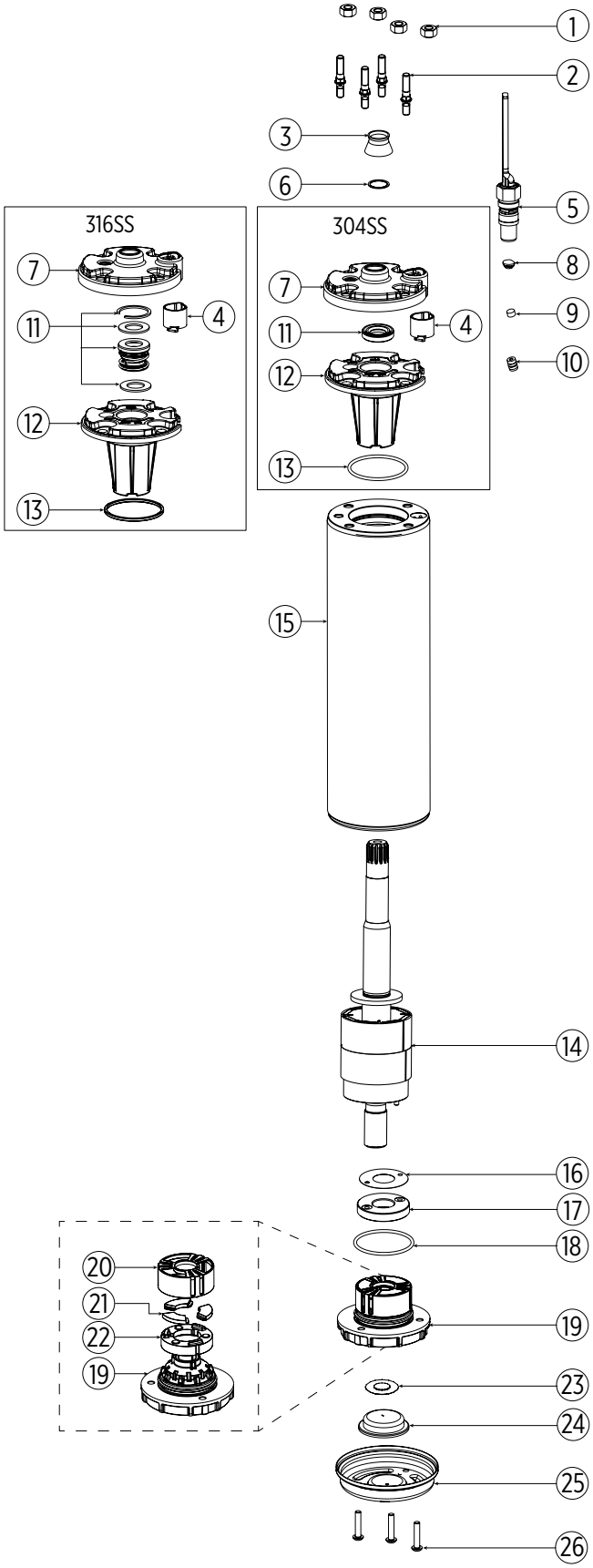

Pos.	Part Description	Qty.	Part number
1	nut M8	4	Kit C
2	stud M8	4	Kit C
3	protector (spline)	1	Kit B
4	connector boss	1	Kit A1 151820103
5	motor lead	1	see page 66
6	washer	1	Kit B
7	top endbell, cover 304SS	1	Kit A1 150262151
	top endbell, cover 316SS	1	Kit A1 150262251
8	plug	1	Kit B
9	filter	1	Kit B
10	valve	1	Kit A
11	shaft seal	1	Kit B
12	top endbell	1	Kit A
13	O-ring	1	Kit B
14	rotor	1	see page 71
15	stator	1	see page 71
16	level washer	1	Kit A
17	thrust disc assy	1	Kit A
18	O-ring	1	Kit B
19	bottom endbell	1	Kit A2
20	bearing cage	1	Kit A
21	segments	3	Kit A
22	rocking disc	1	Kit A
23	diaphragm washer	1	Kit B 151314101
24	diaphragm	1	Kit B
25	bottom endbell cover 304SS	1	156 414 201
	bottom endbell cover 316SS		156 414 301
26	screw, cover	3	Kit C

4" 3~ ENCAPSULATED PM MOTOR SPARE PARTS 3.0 - 7.5 kW / 6500 N

MOTOR PARTS DESCRIPTION

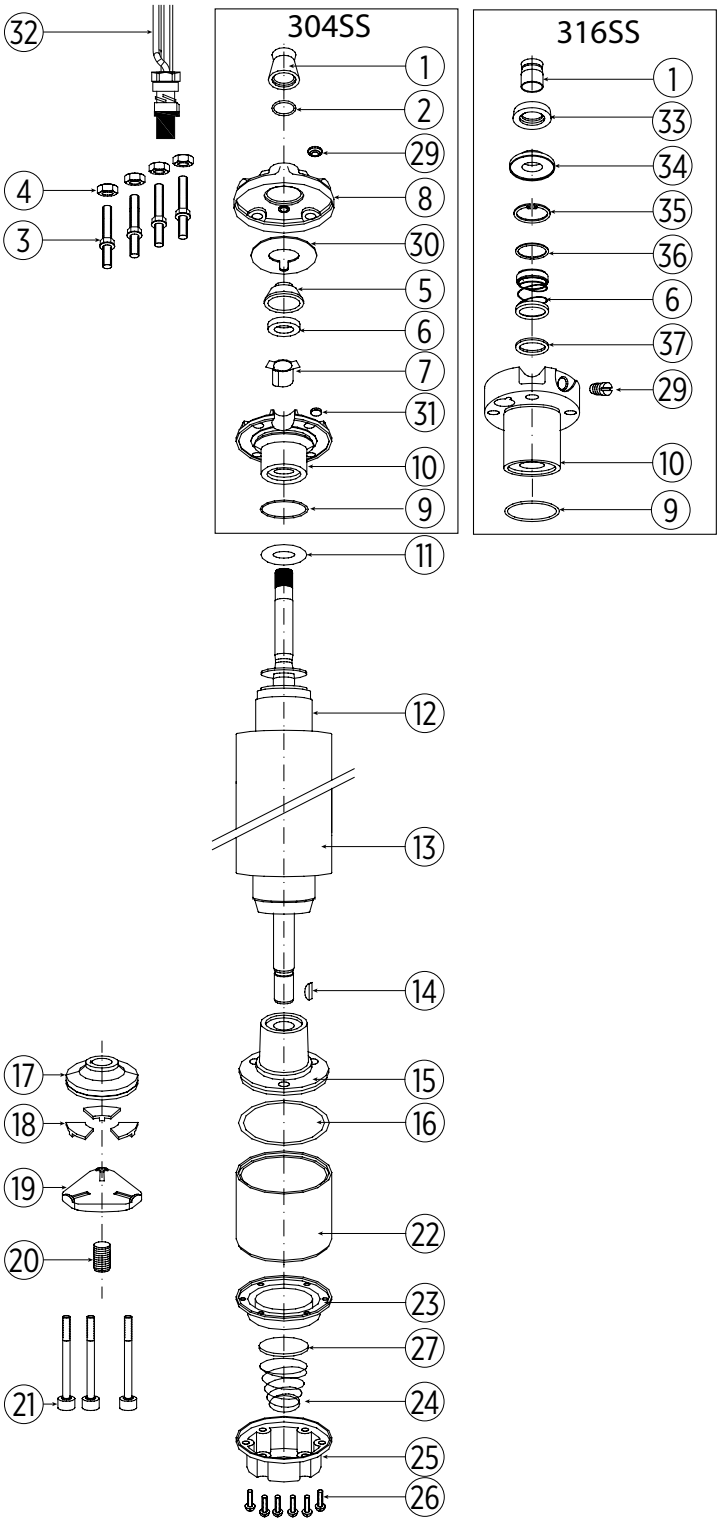

Pos.	Part Description	Qty.	Part No.
1	protector, spline	1	Kit B
2	washer	1	Kit B
3	stud	4	Kit C
4	nut	4	Kit C
5	seal cover	1	Kit D
6	shaft seal	1	Kit B+D
7	connector boss	1	Kit D
8	top endbell, cover	1	Kit D
9	O-ring	1	Kit B+D
10	top endbell	1	Kit D
11	upthrust washer	1	Kit
12	rotor	1	see page 71
13	stator	1	see page 71
14	woodruff key	1	275 250 104
15	bottom endbell	1	Kit
16	O-ring	1	Kit B
17	thrust disc	1	Kit A
18	segment	1	Kit A
19	leveling disc	1	155 660 101
20	adjustimg screw	1	151 048 103
21	screws	3	Kit C
22	thrust housing	1	177 378 901
23	diaphragm	1	Kit B
24	spring	1	151 449 101
25	cover, diaphragm	1	155 647 101
26	screws	6	Kit C
27	cup spring, diaphragm	1	151 448 101
29	sealing stopper	1	Kit B+D
30	seal	1	Kit D
31	filter	1	Kit B+D
32	motor lead	1	see page 66
33	sand slinger (316SS)	1	Kit B
34	seal cover (316SS)	1	Kit B
35	ring	1	Kit B
36	spring ring	1	Kit B
37	support disc seal	1	Kit B

4" 3~ ENCAPSULATED PM MOTOR SPARE PARTS

OVERVIEW SPARE PARTS KITS 4000 N

P_N [kW]	0.55 - 3.0 kW	including positions	order no.
Kit A1	upper end bell 304SS	4, 7 - 13	308 462 901
	upper end bell 316SS		308 462 951
Kit A2	lower end bell incl. thrust bearing kit 4000N	16 - 22	308 464 911
Kit B	seal kit Standard 304SS	3, 6, 8, 9, 11, 13, 18, 23	308 650 201
	seal kit Standard 316SS		308 650 251
Kit C	fastener kit 304SS	1, 2, 26	308 656 201
	fastener kit 316SS		308 656 251

OVERVIEW SPARE PARTS KITS MOTORS 6500 N

P_N [kW]	upper end bell (Pos. 10)	lower end bell (Pos. 15)	Upthrust washer (Pos. 11)
3,0 - 7,5	308 233 509 - 304SS	177 379 921	308 268 104
	3,0 - 4,0kW - 177 390 957 - 316SS		3,0 - 4,0kW - 308 747 101
	4,0 - 7,5kW - 177 390 959 - 316SS	177 379 901	4,0 - 7,5kW - 275 540 163
Kit A	thrust bearing kit 6500N	incl. pos. 17, 18	308 700 301
Kit B	seal kit 304SS	incl. pos. 1, 2, 6, 9, 16, 23, 29, 31	308 900 351
	seal kit 316SS	incl. pos. 6, 9, 16, 23, 34, 36	308 900 302
Kit D	fastener kit 304SS	incl. pos. 3, 4, 21, 26	308 658 351
	fastener kit 316SS		308 658 301

SPARE PARTS STATOR AND ROTOR 220 V

P_N [kW]	U_N [V]	Thrust F [N]	Model no. Motor	Model no. Stator	Model no. Rotor
0.55 - 1.1	220	4000	234 071 ****	305 491 951	178 172 901 K
1.1 - 2.2	220	4000	234 072 ****	305 491 952	178 172 903 K
2.2 - 3.0	220	4000	234 073 ****	305 491 953	178 172 904 K
3.0 - 4.0	220	6500	234 074 ****	305 491 957	178 173 921 K

SPARE PARTS STATOR AND ROTOR 380 V

P_N [kW]	U_N [V]	Thrust F [N]	Model no. Motor	Model no. Stator	Model no. Rotor
1.1 - 2.2	380	4000	234 062 ****	305 491 954	178 172 903 K
2.2 - 3.0	380	4000	234 063 ****	305 491 955	178 172 904 K
3.0 - 4.0	380	6500	234 064 ****	305 491 958	178 173 921 K
7.5	380	6500	234 066 ****	305 491 959	178 141 921 K

Youtube tutorial 4 CT motor cable mounting: ➡️ https://youtu.be/tHFNfUByT3s

6" ENCAPSULATED MOTOR

High-quality encapsulated motor with hermetically-sealed windings

SAND FIGHTER

WATER WELL WW CI PC / 304SS

OPTIONAL STAINLESS STEEL 304

OPTIONAL STAINLESS STEEL 316

FEATURES & BENEFITS

- Double-flange NEMA mounting design
- Stainless steel splined shaft
- VFD operation is possible up to a rated voltage of 400V (in compliance with the application guidelines in the motor operating instructions and the VFD manufacturer). For VFD operation with higher voltages, please consult Franklin Electric.
- StatorShield™ - Franklin encapsulation system
- Factory filled with Franklin's FES91 motor fill solution
- Liquid lubricated radial bearings and High capacity Kingsbury type thrust bearing for 100 % maintenance free operation
- Field replaceable lead using Franklin's exclusive Water Bloc technology
- Pressure-equalizing diaphragm, spring pre-loaded
- SandFighter™ sealing system with SIC mechanical seal and sand slinger
- High efficiency electrical design for low operation costs
- Standard Motor: WW- Water well Design (Stator 304SS / Castings - CI Powder coated)
- Drinking water approvals

OPTIONS

- Higher-graded materials: 316SS and 304SS
- Other voltages
- 45 kN High Thrust version (Standard in 37 kW and 45 kW)
- Retrofitable PT 100 temperature sensor
- Integrated SubMonitor™ sensor (Standard for 37 and 45 kW)
- Special lead lengths up to 50 m

STANDARD SPECIFICATION

- Ratings: 4 - 45 kW
- Thrust load: 15.5 kN: 4 - 22 kW
  27.5 kN: 30 kW
  45 kN: 37 - 45 kW
- 6" NEMA flange
- Max. storage temperature - 15 °C to + 60 °C
- Nominal ambient temperature (with 0.16 m/s cooling flow): 4 - 30 kW: 30 °C, 37 - 45 kW: 50 °C
- Standard Voltage: 50 Hz: - 10 % / + 6 % U_N [380 - 415 V = (380 - 10%) – (415 + 6 %)] 80-415 V; 60 Hz: ± 10 % U_N, 460 V
- Protection IP68 and insulation class F
- Motor protection: DIN 61947-4-1
- Frequency of starts: 20 starts/ hour (with min. 3 minutes resting time), equally distributed
- DOL / YΔ - start (pos. of cables 90 °)
- Motor lead length: 4 m
- Installation orientation: Vertical / horizontal (shaft end heightened)
- Rotation counter clock wise facing shaft end (Rotation reversible for 3 phase motors

MOTOR MODEL NUMBERS 50 HZ - 3-PHASE DESIGN*

P_N [kW]	U_N [V]	Model number Digit 1 – 6		Model number Digit 7 - 10						
				Standard			with SubMonitor Transmitter			45 KN Motor Version
		DOL	YΔ	WW**	304SS	316SS	WW**	304SS	316SS	
4	220, 230	236 680	236 670	9061	1061	3961	6061	1161	4061	**63
	380 - 415	236 610	236 710							
	500	236 700	236 790							
5,5	220, 230	236 681	236 671	9061	1061	3961	6061	1161	4061	**63
	380 - 415	236 611	236 711							
	500	236 701	236 791							
7,5	220, 230	236 682	236 672	9061	1061	3961	6061	1161	4061	**63
	380 - 415	236 612	236 712							
	500	236 702	236 792							
9,3	220, 230	236 015	236 005	9061	1061	3961	6061	1161	4061	**63
	380 - 415	236 001	236 011							
	500	236 008	236 018							
11	220, 230	236 683	236 673	9061	1061	3961	6061	1161	4061	**63
	380 - 415	236 613	236 713							
	500	236 703	236 793							
15	220, 230	236 684	236 674	9061	1061	3961	6061	1161	4061	**63
	380 - 415	236 614	236 714							
	500	236 704	236 794							
18,5	220, 230	236 685	236 675	9061	1061	3961	6061	1161	4061	**63
	380 - 415	236 615	236 715							
	500	236 705	236 795							
22	220, 230	236 686	236 676	9061	1061	3961	6061	1161	4061	**63
	380 - 415	236 616	236 716							
	500	236 706	236 796							
30	220, 230		236 677	9061	1061	3961	6061	1161	4061	**63
	380 - 415	236 617	236 717							
	500	236 707	236 797							
37	380 - 415	276 618	276 718				6161		6361	Standard
45	380 - 415	276 619	276 719				6161		6361	Standard

* VFD operation is only allowed up to 400V supply voltage, for higher voltages please consult Franklin Electric Europa GmbH

** WW- Water well Design (Stator 304SS / Castings - CI Powder coated)

MOTOR MODEL NUMBERS 60 HZ - 3-PHASE DESIGN*

P_N [kW]	P_N [HP]	U_N [V]	Model number Digit 1 – 6		Model number Digit 7 - 10						High Thrust 45 KN Motor Version
			DOL	YΔ	Standard			with SubMonitor Transmitter			
					WW	304SS	316SS	WW	304SS	316SS	
4	5,5	200	236 650	236 760	9061	1061	3961	6061	1161	4061	**63
		230	236 600	236 720	9061	1061	3961	6061	1161	4061	**63
		380	236 660	236 780	9061	1061	3961	6061	1161	4061	**63
		460	236 610	236 710	9061	1061	3961	6061	1161	4061	**63
		575	236 620	236 400	9061	1061	3961	6061	1161	4061	**63
5,5	7,5	200	236 651	236 761	9061	1061	3961	6061	1161	4061	**63
		230	236 601	236 721	9061	1061	3961	6061	1161	4061	**63
		380	236 661	236 781	9061	1061	3961	6061	1161	4061	**63
		460	236 611	236 711	9061	1061	3961	6061	1161	4061	**63
		575	236 621	236 401	9061	1061	3961	6061	1161	4061	**63
7,5	10,0	200	236 652	236 762	9061	1061	3961	6061	1161	4061	**63
		230	236 602	236 722	9061	1061	3961	6061	1161	4061	**63
		380	236 662	236 782	9061	1061	3961	6061	1161	4061	**63
		460	236 612	236 011	9061	1061	3961	6061	1161	4061	**63
		575	236 622	236 402	9061	1061	3961	6061	1161	4061	**63
9,3	12,5	200	236 061	236 ***	9061	1061	3961	6061	1161	4061	**63
		230	236 041	236 ***	9061	1061	3961	6061	1161	4061	**63
		380	236 031	236 032	9061	1061	3961	6061	1161	4061	**63
		460	236 001	236 011	9061	1061	3961	6061	1161	4061	**63
		575	236 ***	236 ***	9061	1061	3961	6061	1161	4061	**63
11	15,0	200	236 653	236 763	9061	1061	3961	6061	1161	4061	**63
		230	236 603	236 723	9061	1061	3961	6061	1161	4061	**63
		380	236 663	236 783	9061	1061	3961	6061	1161	4061	**63
		460	236 613	236 713	9061	1061	3961	6061	1161	4061	**63
		575	236 623	236 403	9061	1061	3961	6061	1161	4061	**63
15	20,0	200	236 654	236 764	9061	1061	3961	6061	1161	4061	**63
		230	236 604	236 724	9061	1061	3961	6061	1161	4061	**63
		380	236 664	236 784	9061	1061	3961	6061	1161	4061	**63
		460	236 614	236 714	9061	1061	3961	6061	1161	4061	**63
		575	236 624	236 404	9061	1061	3961	6061	1161	4061	**63
18,5	25,0	200	236 655	236 765	9061	1061	3961	6061	1161	4061	**63
		230	236 605	236 725	9061	1061	3961	6061	1161	4061	**63
		380	236 665	236 785	9061	1061	3961	6061	1161	4061	**63
		460	236 615	236 715	9061	1061	3961	6061	1161	4061	**63
		575	236 625	236 405	9061	1061	3961	6061	1161	4061	**63
22	30,0	200	236 656	236 766	9061	1061	3961	6061	1161	4061	**63
		230	236 606	236 726	9061	1061	3961	6061	1161	4061	**63
		380	236 666	236 786	9061	1061	3961	6061	1161	4061	**63
		460	236 616	236 716	9061	1061	3961	6061	1161	4061	**63
		575	236 626	236 406	9061	1061	3961	6061	1161	4061	**63
30	40	380	236 667	236 787	9061	1061	3961	6061	1161	4061	**63
		460	236 617	236 717	9061	1061	3961	6061	1161	4061	**63
		575	236 627	236 407	9061	1061	3961	6061	1161	4061	**63
37	50	380	276 668	276 788				6161		6361	Standard
		460	276 618	276 718				6161		6361	Standard
		575	276 628	276 **8				6161		6361	Standard
45	60	380	276 669	276 789				6161		6361	Standard
		460	276 619	276 719				6161		6361	Standard
		575	276 629	276 **9				6161		6361	Standard

* VFD operation is only allowed up to 400V supply voltage, for higher voltages please consult Franklin Electric Europa GmbH

** WW- Water well Design (Stator 304SS / Castings - CI Powder coated)

MOTOR PERFORMANCE DATA 50 HZ - 3-PHASE DESIGN

P_N [kW]	Thrust F [N]	U_N [V]	n_N [min⁻¹]	I_N [A]	I_A [A]	η (Eff.) [%] at % load			cos φ (Pf.) at % load			T_N [Nm]	T_A [Nm]
						50	75	100	50	75	100		
4,0	15.500	220	2840	16,4	73	76,0	78,5	77,0	0,70	0,80	0,85	12,5	17,9
		230	2860	16,1	75	74,0	77,5	78,0	0,62	0,74	0,82	12,3	20,2
		380	2840	9,5	42	76,0	78,5	77,0	0,70	0,80	0,85	12,5	17,9
		400	2860	9,3	43	74,0	77,5	78,0	0,62	0,74	0,82	12,3	20,2
		415	2880	9,3	46	74,5	78,0	78,5	0,57	0,70	0,78	12,3	20,8
		500	2840	7,2	32	76,0	78,5	77,0	0,70	0,80	0,85	12,5	17,9
5,5	15.500	220	2850	22,1	104	77,0	79,0	78,0	0,70	0,80	0,85	18,7	30,3
		230	2870	21,7	106	74,0	78,0	79,0	0,63	0,75	0,82	18,6	35,0
		380	2850	12,8	60	77,0	79,0	78,0	0,70	0,80	0,85	18,7	30,3
		400	2870	12,5	64	74,0	78,0	79,0	0,63	0,75	0,82	18,6	35,0
		415	2880	12,8	66	74,0	77,5	78,0	0,58	0,70	0,78	18,6	35,9
		500	2850	9,7	46	77,0	79,0	78,0	0,70	0,80	0,85	18,7	30,3
7,5	15.500	220	2850	28,2	143	77,5	79,5	79,0	0,74	0,83	0,87	25,0	43,0
		230	2860	27,7	144	75,0	78,5	79,0	0,70	0,81	0,86	25,0	47,7
		380	2850	16,3	83	77,5	79,5	79,0	0,74	0,83	0,87	25,0	43,0
		400	2860	16,0	83	75,0	78,5	79,0	0,70	0,81	0,86	25,0	47,7
		415	2880	16,2	91	75,0	78,5	79,0	0,61	0,74	0,81	24,7	51,3
		500	2850	12,4	63	77,5	79,5	79,0	0,74	0,83	0,87	25,0	43,0
9,3	15.500	220	2870	36,4	183	79,0	81,0	81,0	0,71	0,81	0,86	31,1	61,6
		230	2870	36,0	189	78,0	81,0	81,0	0,58	0,72	0,80	31,1	68,6
		380	2870	21,0	106	79,0	81,0	81,0	0,71	0,81	0,86	31,1	61,6
		400	2870	20,7	112	78,0	81,0	81,0	0,58	0,72	0,80	31,1	68,2
		415	2890	21,0	116	74,0	79,0	80,0	0,55	0,70	0,78	30,8	74,1
		500	2870	16,0	80	79,0	81,0	81,0	0,71	0,81	0,86	31,1	61,6
11,0	15.500	220	2860	41,5	218	80,0	82,0	81,0	0,73	0,82	0,87	37,4	72,8
		230	2860	40,4	224	78,5	81,0	81,0	0,68	0,79	0,85	37,3	78,3
		380	2860	24,0	126	80,0	82,0	81,0	0,73	0,82	0,87	37,4	72,8
		400	2860	23,3	129	78,5	81,0	81,0	0,68	0,79	0,85	37,3	78,3
		415	2870	24,1	136	74,5	78,5	79,5	0,61	0,74	0,81	37,2	84,8
		500	2860	18,2	96	80,0	82,0	81,0	0,73	0,82	0,87	37,4	72,8
15,0	15.500	220	2850	55,0	283	81,0	83,0	82,0	0,76	0,84	0,86	50,0	104,0
		230	2860	54,2	289	79,0	81,5	81,0	0,70	0,80	0,85	49,9	107,3
		380	2850	32,0	164	81,0	83,0	82,0	0,76	0,84	0,86	50,0	104,0
		400	2860	31,3	169	79,0	81,5	81,0	0,70	0,80	0,85	49,9	107,3
		415	2870	31,0	179	77,0	81,0	81,0	0,65	0,77	0,83	49,6	116,6
		500	2850	24,3	124	81,0	83,0	82,0	0,76	0,84	0,86	50,0	104,0
18,5	15.500	220	2850	69,2	380	82,0	83,0	82,0	0,76	0,84	0,87	62,4	139,7
		230	2860	66,7	392	80,0	82,5	82,0	0,68	0,79	0,85	62,4	159,6
		380	2850	40,0	220	82,0	83,0	82,0	0,76	0,84	0,87	62,4	139,7
		400	2850	38,5	231	80,0	82,5	82,0	0,68	0,79	0,85	62,4	154,6
		415	2850	38,5	240	78,5	81,5	82,0	0,64	0,76	0,83	62,1	166,8
		500	2850	30,5	168	82,0	83,0	82,0	0,76	0,84	0,87	62,4	139,7
22	15.500	220	2840	81,2	441	82,0	83,0	82,0	0,78	0,86	0,88	75,3	160,0
		230	2860	78,5	455	81,0	83,0	83,0	0,71	0,81	0,86	74,7	177,6
		380	2840	47,0	255	82,0	83,0	82,0	0,78	0,86	0,88	75,3	160,0
		400	2860	45,3	268	81,0	83,0	83,0	0,71	0,81	0,86	74,7	177,6
		415	2870	45,0	278	79,5	82,5	82,5	0,66	0,78	0,84	74,5	189,9
		500	2840	35,8	194	82,0	83,0	82,0	0,78	0,86	0,88	75,3	160,0
30	27.500	220	2860	111	645	83,0	83,5	82,5	0,74	0,82	0,85	99,6	237,4
		230	2860	107	670	80,5	83,0	83,0	0,67	0,79	0,84	99,4	263,1
		380	2860	64,1	373	83,0	83,5	82,5	0,74	0,82	0,85	99,6	237,4
		400	2860	63,5	393	80,5	83,0	83,0	0,67	0,79	0,84	99,4	263,1
		415	2880	64,5	407	79,0	82,0	82,5	0,62	0,74	0,81	99,0	283,5
		500	2860	49,0	283	83,0	83,5	82,5	0,74	0,82	0,85	99,6	237,4
37	45.000	380	2850	80,1	387	77	80,0	81,0	0,75	0,82	0,87	124,8	269,8
		400	2870	77,9	411	76	80,0	81,0	0,68	0,78	0,85	124,5	269,8
		415	2880	77,9	423	75	79,0	81,0	0,64	0,75	0,82	123,8	269,8
45	45.000	380	2850	95,5	480	79	81,0	82,0	0,76	0,83	0,87	150,5	287,4
		400	2870	93,9	509	78	80,0	82,0	0,72	0,79	0,84	149,1	325,4
		415	2880	93,2	531	77	80,0	82,0	0,68	0,77	0,82	149,1	355,2

MOTOR PERFORMANCE DATA 60 HZ - 3-PHASE DESIGN

P_N [kW]	P_{max} [kW]	Thrust F [N]	U_N [V]	n_N [min^{-1}]	$I_{max.}$ [A]	I_A [A]	η_{max} [%] at 100% load	LINE TO LINE RESISTANCE [Ω]
4,0	4,6	15500	200	3450	20.0	99	79	.77-.93
			230	3450	17.6	86	79	1.0-1.2
			380	3450	10.7	52	79	2.6-3.2
			460	3450	8.8	43	79	3.9-4.8
			575	3450	7.1	34	79	6.3-7.7
5.5	6,3	15500	200	3450	28.3	150	80	.43-.53
			230	3450	24.6	130	80	.64-.78
			380	3450	15	79	80	1.6-2.1
			460	3450	12.3	65	80	2.4-2.9
			575	3450	9.8	52	80	3.7-4.6
7.5	8,6	15500	200	3450	37	198	79	.37-.45
			230	3450	32.2	172	79	.47-.57
			380	3450	19.6	104	79	1.2-1.5
			460	3450	16.1	86	79	1.9-2.4
			575	3450	12.9	69	79	3.0-3.7
9,3	10,7	15500	200	3450				
			230	3450	38,0	236,0	82	
			380	3450	23,9	142,8	82	
			460	3450	19,5	118,0	82	
			575	3450				
11	12,7	15500	200	3450	54.4	306	81	.24-.29
			230	3450	47.4	266	81	.28-.35
			380	3450	28.9	161	81	.77-.95
			460	3450	23.7	133	81	1.1-1.4
			575	3450	19	106	81	1.8-2.3
15	17,3	15500	200	3450	69.7	416	82	.16-.20
			230	3450	60.6	362	82	.22-.26
			380	3450	37.3	219	82	.55-.68
			460	3450	30.3	181	82	.8-1.0
			575	3450	24.2	145	82	1.3-1.6
18.5	21,3	15500	200	3450	86.3	552	83	.12-.15
			230	3450	75	480	83	.15-.19
			380	3450	46	291	83	.46-.56
			460	3450	37.5	240	83	.63-.77
			575	3450	30	192	83	1.0-1.3
22	25,3	15500	200	3450	104	653	83	.09-.11
			230	3450	90.4	568	83	.14-.17
			380	3450	55.4	317	83	.35-.43
			460	3450	45.2	284	83	.52-.64
			575	3450	36.2	227	83	.78-.95
30	34,5	27500	380	3450	74.6	481	83	.26-.33
			460	3450	61.6	397	83	.34-.42
			575	3450	49.6	318	83	.52-.64
37	42,6	45000	230	3450	157		85	.10 - .11
			380	3450	94.5	501	83	.21 - .25
			460	3450	77,0	414	85	.25 - .32
			575	3450	62.5	331	83	.40 - .49
45	51,8	45000	380	3450	111.8	627	84	.15 - .18
			460	3460	91,0	518	85	.22 - .27
			575	3450	73.9	414	84	.35 - .39

WINDING RESISTANCE DATA 50 HZ - 3-PHASE DESIGN

		3 ~ DOL		3 ~ YΔ	
P_N kW	U_N [V]	Stator Ref.	U - V / Ohm V - W / Ohm U - W / Ohm	Stator Ref.	U_1 - U_2 / Ohm V_1 - V_2 / Ohm W_1 - W_2 / Ohm
4.0	220, 230	336 694 ...	1.20 - 1.40	336 740 ...	1.75 - 2.15
	380 - 415	336 327 ...	3.40 - 4.20	336 747 ...	5.40 - 6.60
	500	336 787 ...	5.80 - 7.10	337 224 ...	9.00 - 11.0
5.5	220, 230	336 695 ...	0.72 - 0.90	336 741 ...	1.10 - 1.30
	380 - 415	336 328 ...	2.20 - 2.70	336 748 ...	3.70 - 4.50
	500	336 788 ...	4.00 - 4.90	337 225 ...	6.28 - 7.70
7.5	220, 230	336 696 ...	0.59 - 0.72	336 742 ...	0.87 - 1.08
	380 - 415	336 329 ...	1.70 - 2.20	336 749 ...	2.40 - 2.90
	500	336 789 ...	3.20 - 3.90	337 226 ...	4.53 - 5.54
9.3	220, 230	338 100 ...	0.42 - 0.50	338 103 ...	0.63 - 0.77
	380 - 415	337 915 ...	1.25 - 1.55	338 061 ...	1.94 - 2.38
	500	338 220 ...	2.60 - 3.10	338 223 ...	3.27 - 4.00
11.0	220, 230	336 697 ...	0.35 - 0.44	336 743 ...	0.53 - 0.65
	380 - 415	336 330 ...	1.05 - 1.30	336 750 ...	1.64 - 2.00
	500	336 790 ...	1.80 - 2.20	337 227 ...	2.73 - 3.35
15.0	220, 230	336 698 ...	0.25 - 0.30	336 744 ...	0.38 - 0.47
	380 - 415	336 331 ...	0.75 - 0.94	336 751 ...	1.22 - 1.50
	500	336 791 ...	1.30 - 1.60	337 228 ...	2.04 - 2.50
18.5	220, 230	336 699 ...	0.20 - 0.24	336 745 ...	0.29 - 0.36
	380 - 415	336 332 ...	0.59 - 0.73	336 752 ...	0.93 - 1.15
	500	336 792 ...	1.10 - 1.34	337 229 ...	1.70 - 2.10
22.0	220, 230	336 700 ...	0.16 - 0.20	336 746 ...	0.24 - 0.30
	380 - 415	336 333 ...	0.48 - 0.60	336 753 ...	0.74 - 0.92
	500	336 793 ...	0.83 - 1.00	337 230 ...	1.26 - 1.55
30.0	220, 230			337 353 ...	0.16 - 0.20
	380 - 415	336 334 ...	0.32 - 0.40	336 754 ...	0.50 - 0.61
	500	336 794 ...	0.60 - 0.73	337 231 ...	0.91 - 1.11
37.0	380 - 415	338 710 ...	0.41 - 0.45	336 755 ...	0.41 - 0.45
45.0	380 - 415	336 336 ...	0.22 - 0.27	336 756 ...	0.33 - 0.41

MOTOR LEADS DESIGN 3-PHASE MOTORS

DOL	Ø mm²	Lenght [m]	St.#	Motor 220V	Motor 380 - 415V	Motor 500V	B [mm] (± 0,3)	B1 [mm] (±0,3)	H [mm] (± 0,3)
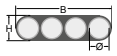	4G4	4	1	4-11kW	4-22 kW	4-30 kW	19,0	-	7,0
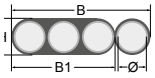	3X8,4+1G8,4	4	1	15-22 kW	30-45 kW		29,5	19,5	8,9

YΔ	Ø mm²	Lenght [m]	St.#	Motor 220V	Motor 380 - 415V	Motor 500V	B [mm] (± 0,3)	B1 [mm] (±0,3)	H [mm] (± 0,3)
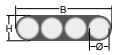	4G4	4	2	4-22kW	4-30 kW		19,0	-	7,0
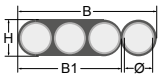	3X8,4+1G8,4	4	1	30-37kW	37-45 kW		29,5	19,5	8,9
	3X8,4		1				19,6	-	8,9

ELECTRICAL CONNECTION - 3-PHASE DESIGN

DOL

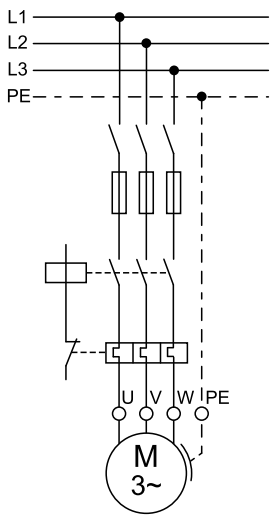

YΔ

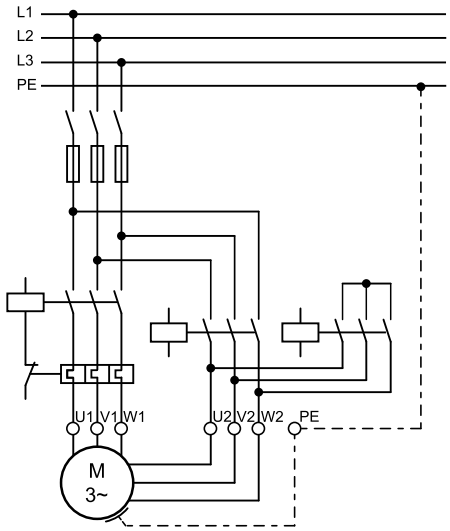

U	V	W	PE
black	grey	brown	yellow/green

MOTOR LEADS 3-PHASE 6" CT STANDARD MOTORS

4G4mm²	3X8,4+1G8,4mm²	3X8,4mm²

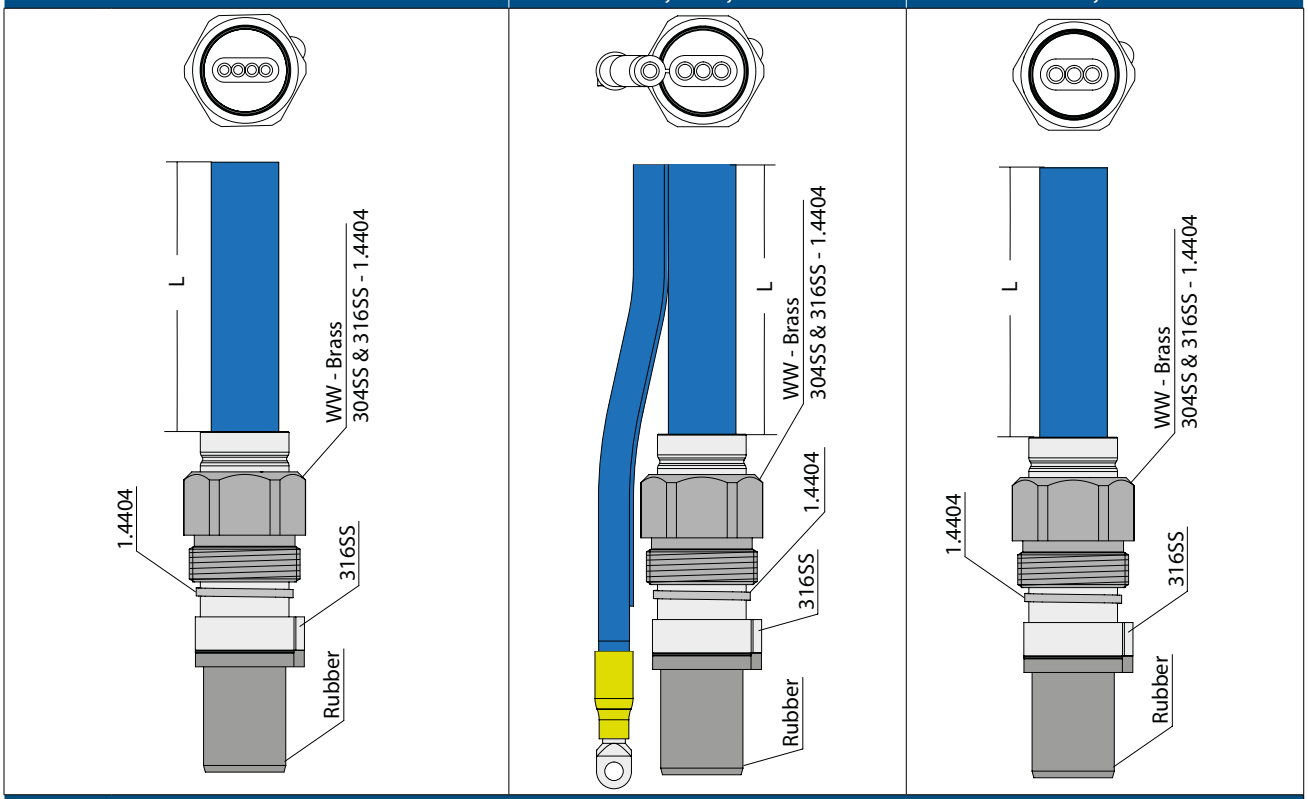

Lead Part Numbers WW Motors *			
L [m]	4G4mm²	3X8,4+1G8,4mm²	3X8,4mm²
4	310 125 004	310 145 004	310 155 004
8	310 125 008	310 145 008	310 155 008
10	310 125 010	310 145 010	310 155 010
15	310 125 015	310 145 015	310 155 015
20	310 125 020	310 145 020	310 155 020
25	310 125 025	310 145 025	310 155 025
30	310 125 030	310 145 030	310 155 030
35	310 125 035	310 145 035	310 155 035
40	310 125 040	310 145 040	310 155 040
45	310 125 045	310 145 045	310 155 045
50	310 125 050	310 145 050	310 155 050

Lead Part Numbers 304SS/316SS Motors *			
L [m]	4G4mm²	3X8,4+1G8,4mm²	3X8,4mm²
4	310 125 504	310 145 504	310 155 504
8	310 125 508	310 145 508	310 155 508
10	310 125 510	310 145 510	310 155 510
15	310 125 515	310 145 515	310 155 515
20	310 125 520	310 145 520	310 155 520
25	310 125 525	310 145 525	310 155 525
30	310 125 530	310 145 530	310 155 530
35	310 125 535	310 145 535	310 155 535
40	310 125 540	310 145 540	310 155 540
45	310 125 545	310 145 545	310 155 545
50	310 125 550	310 145 550	310 155 550

* Cables are designed for submerged operation. For air operation please consult Franklin Electric.

6" Motor Design 4- 30 kW

WW	304SS	316SS

MOTOR MATERIAL DESCRIPTION

Part	WW	304	316 SS
Shell	1.4301	1.4301	1.4571
Upper end bell	Cast iron powder coated	1.4301	1.4408
Thrust housing	Cast iron powder coated	1.4301	1.4408
Mechanical seal	SiC / SiC	SiC / SiC	SiC / SiC
Seal cover	1.4301	1.4301	1.4401
Slinger	EPDM	EPDM	EPDM
Shaft end	1.4305	1.4305	1.4462
Diaphragm	NBR	NBR	NBR
Lead	EPR	EPR	EPR

6" CT MOTOR DESIGN 4 - 30KW

WW

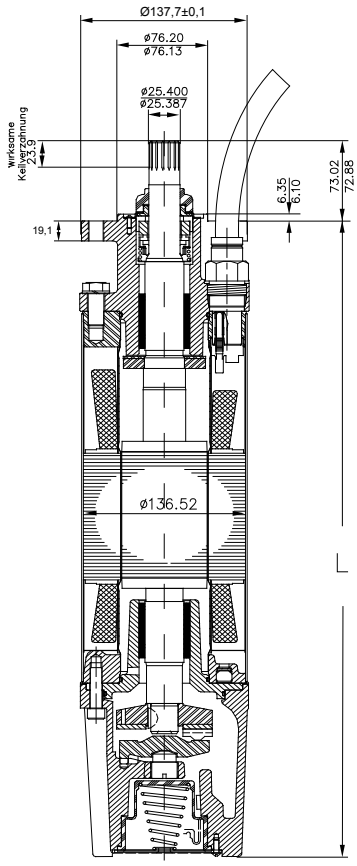

304SS

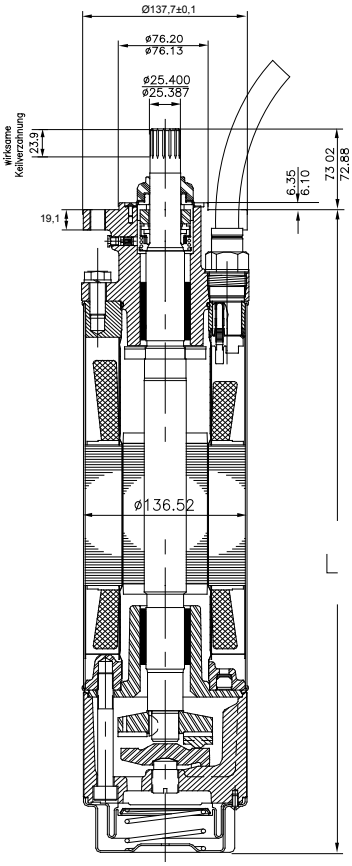

316SS

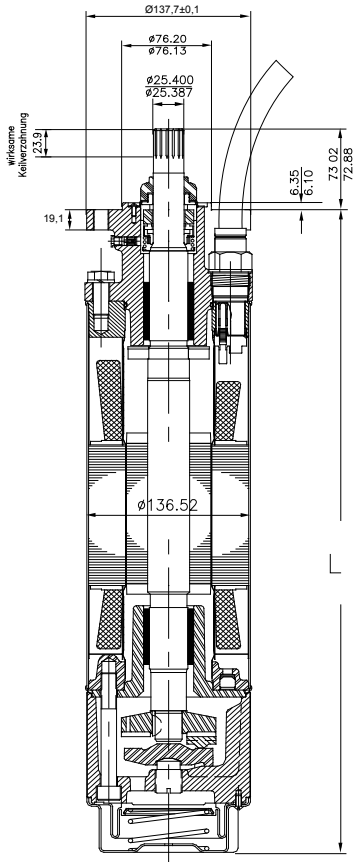

End bell Design

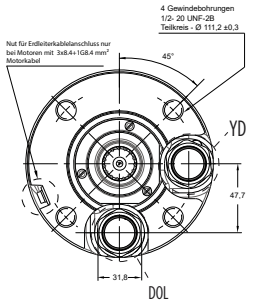

6" CT MOTORS 4- 30KW DIMENSION

P_N [kW]	WW L [mm]	304SS L [mm]	316SS L [mm]	Pack dimension B x H x L [mm]	Pack weight [kg]		Motor packing
					DOL	YΔ	
4	581,2	570,7	570,7	155 x 340 x 800	40,3	41,3	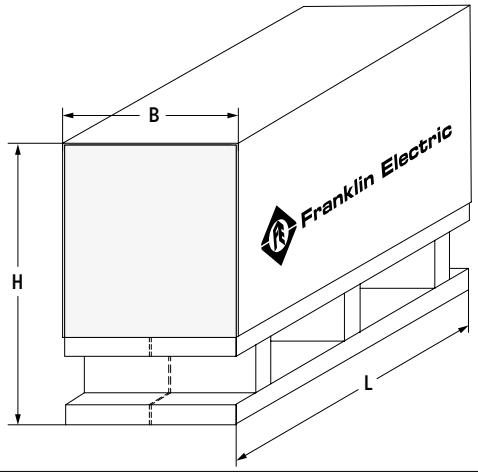
5,5	614,4	604,0	604,0	155 x 340 x 800	43,9	44,9	
7,5	646,2	635,8	635,8	155 x 340 x 800	48,0	49,0	
9,3	678,7	668,3	668,3	155 x 340 x 1070	51,3	50,3	
11	711,2	700,8	700,8	155 x 340 x 1070	53,7	54,7	
15	776,2	765,8	765,8	155 x 340 x 1070	59,5	60,5	
18,5	841,5	831,1	831,1	155 x 340 x 1070	66,1	67,1	
22	906,5	896,1	896,1	155 x 340 x 1070	72,1	73,1	
30	1036,6	1026,2	1026,2	155 x 340 x 1200	87,7	87,7	

6" Motor Design 37- 45 kW

WW	316SS

MOTOR MATERIAL DESCRIPTION

Part	WW	316 SS
Shell	1.4301	1.4571
Upper end bell	Cast iron powder coated	1.4408
Thrust housing	Cast iron powder coated	1.4408
Mechanical seal	SiC / SiC	SiC / SiC
Seal cover	1.4301	1.4401
Slinger	Viton	Viton
Shaft end	1.4305	1.4542
Diaphragm	Viton	Viton
Lead	EPR	EPR
Jam Nut (Lead)	Brass	1.4401
Lead bushing	Rubber	Rubber

6" Motor Design 37- 45 kW

WW / 316SS

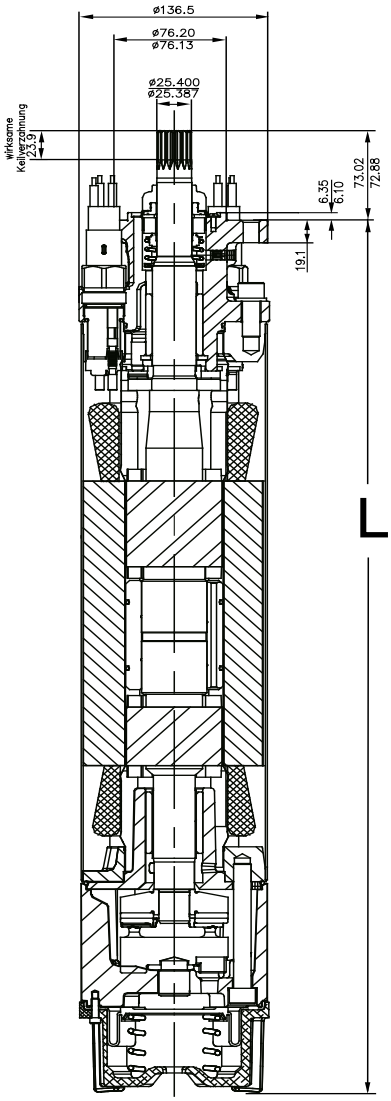

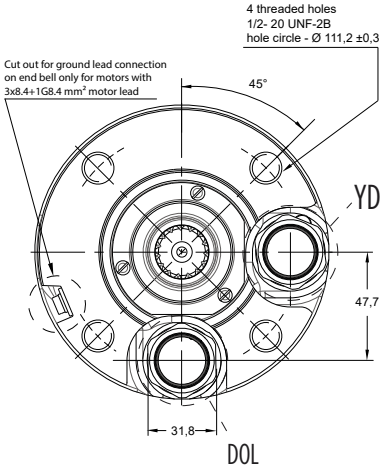

MOTOR DIMENSION

P_N [kW]	WW L [mm]	316SS L [mm]	Motor Package Size [mm]	Shipping Weight [kg]
37	1476,7	1476,7	223 x 267 x 1823	136
45	1629,2	1629,2	223 x 267 x 1823	150

6" Encapsulated Motors WW Version 4-30kW

Rotor Kit 6500N to 15.500N	4,0 kW	incl. Pos.: 25; 26, 29	305 330 901
	5,5 kW	incl. Pos.: 25; 26, 29	305 330 902
Kit A2 15.500N / 4-22kW	Thrust Bearing Kit	incl. Pos.: 26	308 750 120
Kit A3 27.500N / 30kW	Thrust Bearing Kit	incl. Pos.: 26	308 750 200
Kit A4	Thrust Bearing Kit 45.000N	incl. Pos.: 26	308 750 510
45kN Conversion Kit 4,0 - 30kW		incl. Pos.: 12; 16; 18; 19 ; 20; 21; 22; 23; 24; 26; 30; 41	308 750 500
Kit B1 4 - 30kW	Seal Kit	incl. Pos.: 4; 17; 20; 41; 42	308 800 125
Kit C1	Slinger Kit	incl. Pos.: 1; 2; 3; 37	308 725 101
Kit D3 up to 07.2002	Screw Kit	incl. Pos.: 5; 19; 24	308 659 120
Kit D4 starting 07.2002	Screw Kit	incl. Pos.: 5; 19; 24	308 659 121
Kit E* 4 - 30 kW	Radial Bearing Kit	incl. Pos.: 12; 28	308 678 101
* Radial Bearing Parts are unfinished			

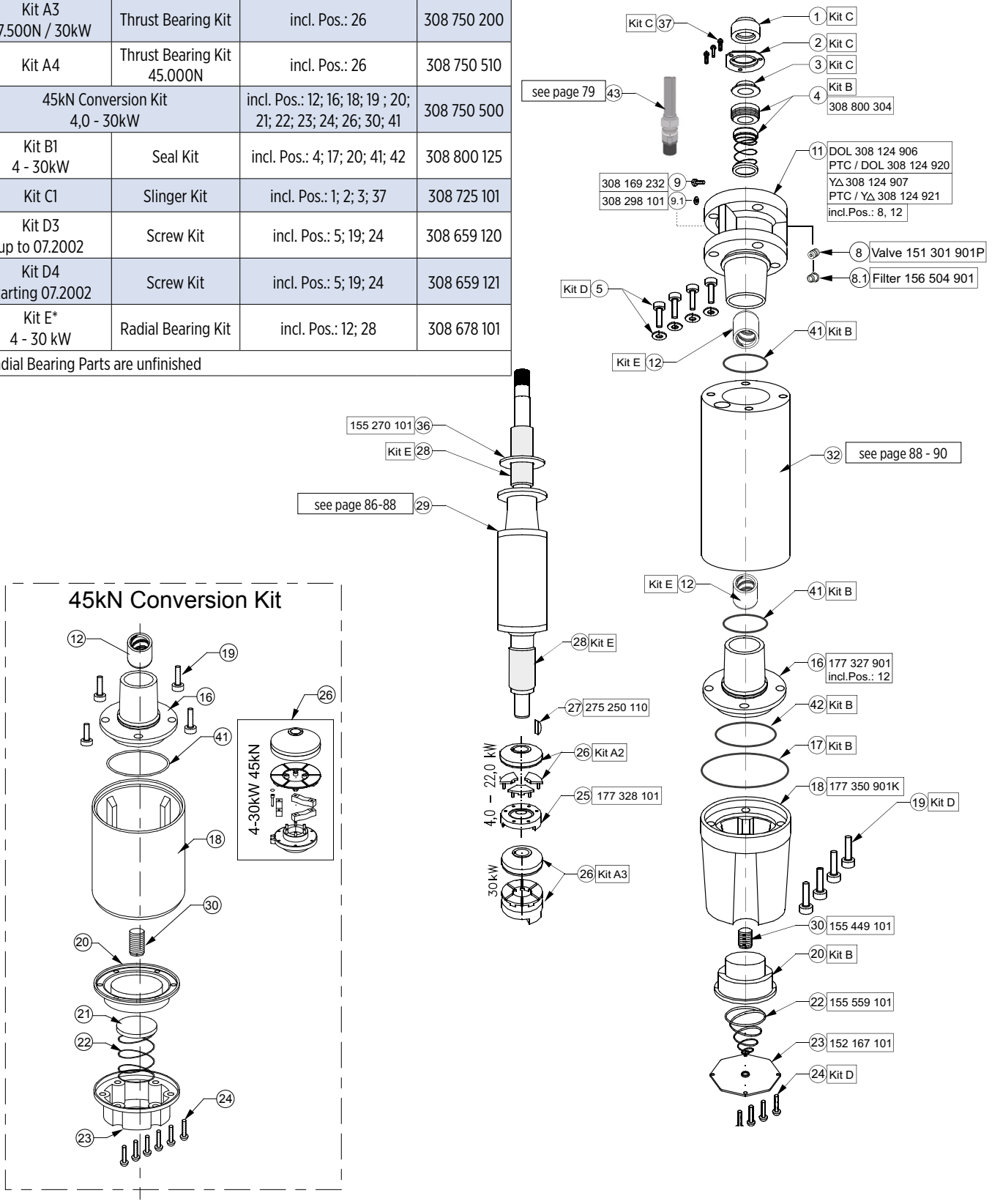

6" Encapsulated Motors WW Version 37-45kW

Kit A3	Thrust Bearing Kit 27.500N	incl. Pos.: 26	308 750 200
Kit A4	Thrust Bearing Kit 45.000N	incl. Pos.: 26	308 750 510
45kN Conversion Kit 37 - 45 kW		incl. Pos.: 12; 16; 18; 19 ; 20; 21; 22; 23; 24; 26; 30; 41	308 750 500
Kit B3	Seal Kit	incl. Pos.: 4; 17; 20; 21, 41; 44	308 800 250
Kit C3	Slinger Kit	incl. Pos.: 1; 2; 3; 37	308 725 150
Kit D5	Screw Kit	incl. Pos.: 5; 19; 24	308 659 155
Kit E*	Radial Bearing Kit	incl. Pos.: 12; 28	308 678 101
* Radial Bearing Parts are unfinished			

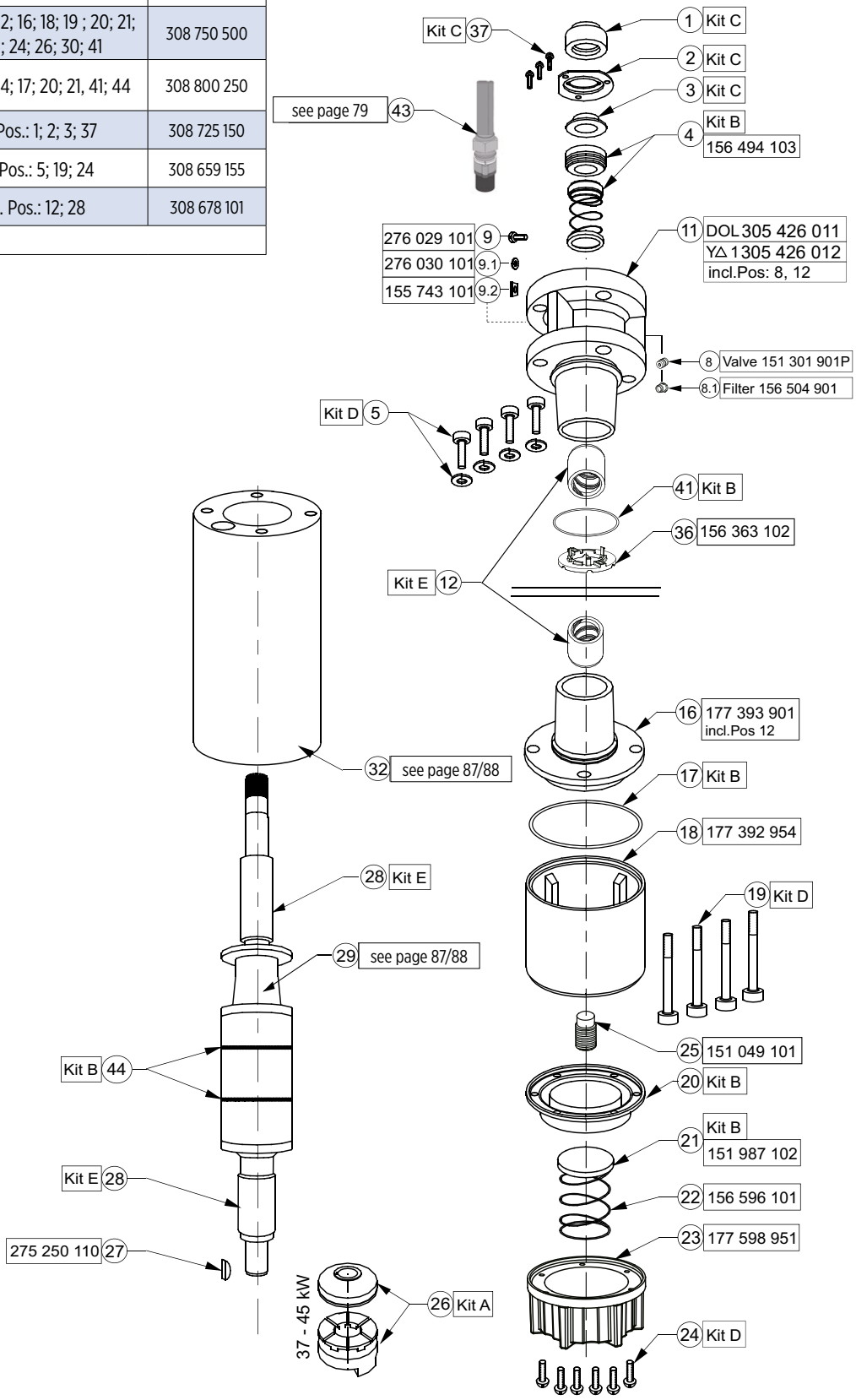

Replacement Stators and Rotors WW Version / 50 Hz

3 ~ ohne SubMonitor Transmitter 3 ~ without SubMonitor Transmitter	3 ~ sans transm. SubMonitor 3 ~ senza trasmettitore SubMonitor	3 ~ sin transmissor SubMonitor 3 ~ sem transmissor SubMonitor

			DOL		YΔ (*)		
P_N [kW]	U_N [V]	Thrust F [N]	Motor Model No.	Stator Model No.	Motor Model No.	Stator Model No.	Rotor Model No.
4,0	220, 230	15.500	236 680 90**	305 478 927	236 670 90**	305 478 930	178 117 912K
	380, 400, 415		236 610 90**	305 478 928	236 710 90**	305 478 931	
	500		236 700 90**	305 478 929	236 790 90**	305 478 932	
5,5	220, 230	15.500	236 681 90**	305 479 930	236 671 90**	305 479 933	178 118 911K
	380, 400, 415		236 611 90**	305 479 931	236 711 90**	305 479 934	
	500		236 701 90**	305 479 932	236 791 90**	305 479 935	
7,5	220, 230	15.500	236 682 90**	305 480 932	236 672 90**	305 480 935	178 119 906K
	380, 400, 415		236 612 90**	305 480 933	236 712 90**	305 480 936	
	500		236 702 90**	305 480 934	236 792 90**	305 480 937	
9,3	220, 230	15.500	236 015 90**	305 481 921	236 005 90**	305 481 924	178 182 906K
	380, 400, 415		236 001 90**	305 481 922	236 011 90**	305 481 925	
	500		236 008 90**	305 481 923	236 018 90**	305 481 926	
11,0	220, 230	15.500	236 683 90**	305 482 933	236 673 90**	305 482 936	178 120 906K
	380, 400, 415		236 613 90**	305 482 934	236 713 90**	305 482 937	
	500		236 703 90**	305 482 935	236 793 90**	305 482 938	
15,0	220, 230	15.500	236 684 90**	305 484 933	236 674 90**	305 484 936	178 121 906K
	380, 400, 415		236 614 90**	305 484 934	236 714 90**	305 484 937	
	500		236 704 90**	305 484 935	236 794 90**	305 484 938	
18,5	220, 230	15.500	236 685 90**	305 485 930	236 675 90**	305 485 933	178 122 906K
	380, 400, 415		236 615 90**	305 485 931	236 715 90**	305 485 934	
	500		236 705 90**	305 485 932	236 795 90**	305 485 935	
22,0	220, 230	15.500	236 686 90**	305 486 934	236 676 90**	305 486 937	178 123 906K
	380, 400, 415		236 616 90**	305 486 935	236 716 90**	305 486 938	
	500		236 706 90**	305 486 936	236 796 90**	305 486 939	
30,0	220, 230	27.500			236 677 90**	305 488 923	178 115 906K
	380, 400, 415		236 617 90**	305 488 921	236 717 90**	305 488 924	
	500		236 707 90**	305 488 922	236 797 90**	305 488 925	

(*) : **Kabel 90° versetzt** **Pos. de cavi 90°**
Pos. of leads 90° **Pos. de los cables 90°**
Pos. des câbles 90° **Pos. dos cabos 90°**

Replacement Stators and Rotors WW Version / 50 Hz

3 ~ mit SubMonitor Transmitter 3 ~ with SubMonitor Transmitter	3 ~ avec transm. SubMonitor 3 ~ con trasmettitore SubMonitor	3 ~ con transmissor SubMonitor 3 ~ com transmissor SubMonitor

			DOL		YΔ (*)		
P_N [kW]	U_N [V]	Thrust F [N]	Motor Model No.	Stator Model No.	Motor Model No.	Stator Model No.	Rotor Model No.
4,0	220, 230	15.500	236 680 60**	305 478 907	236 670 60**	305 478 910	178 117 912K
	380, 400, 415		236 610 60**	305 478 908	236 710 60**	305 478 911	
	500		236 700 60**	305 478 909	236 790 60**	305 478 912	
5,5	220, 230	15.500	236 681 60**	305 479 910	236 671 60**	305 479 913	178 118 911K
	380, 400, 415		236 611 60**	305 479 911	236 711 60**	305 479 914	
	500		236 701 60**	305 479 912	236 791 60**	305 479 915	
7,5	220, 230	15.500	236 682 60**	305 480 912	236 672 60**	305 480 915	178 119 906K
	380, 400, 415		236 612 60**	305 480 913	236 712 60**	305 480 916	
	500		236 702 60**	305 480 914	236 792 60**	305 480 917	
9,3	220, 230	15.500	236 015 60**	305 481 901	236 005 60**	305 481 904	178 182 906K
	380, 400, 415		236 001 60**	305 481 902	236 011 60**	305 481 905	
	500		236 008 60**	305 481 903	236 018 60**	305 481 906	
11,0	220, 230	15.500	236 683 60**	305 482 913	236 673 60**	305 482 916	178 120 906K
	380, 400, 415		236 613 60**	305 482 914	236 713 60**	305 482 917	
	500		236 703 60**	305 482 915	236 793 60**	305 482 918	
15,0	220, 230	15.500	236 684 60**	305 484 913	236 674 60**	305 484 916	178 121 906K
	380, 400, 415		236 614 60**	305 484 914	236 714 60**	305 484 917	
	500		236 704 60**	305 484 915	236 794 60**	305 484 918	
18,5	220, 230	15.500	236 685 60**	305 482 910	236 675 60**	305 485 913	178 122 906K
	380, 400, 415		236 615 60**	305 485 911	236 715 60**	305 485 914	
	500		236 705 60**	305 482 912	236 795 60**	305 485 915	
22,0	220, 230	15.500	236 686 60**	305 486 914	236 676 60**	305 486 917	178 123 906K
	380, 400, 415		236 616 60**	305 486 915	236 716 60**	305 486 918	
	500		236 706 60**	305 486 916	236 796 60**	305 486 919	
30,0	220, 230	27.500			236 677 60**	305 488 907	178 115 906K
	380, 400, 415		236 617 60**	305 488 905	236 717 60**	305 488 908	
	500		236 707 60**	305 488 906	236 797 60**	305 488 909	
37,0	380, 400, 415	45.000	276 618 6161	305 489 920	276 718 6161	305 489 919	305 223 920
45,0	380, 400, 415	45.000	276 619 6161	305 490 920	276 719 6161	305 490 919	305 223 921

(*) : Kabel 90° versetzt / Pos. de cavi 90°
Pos. of leads 90° / Pos. de los cables 90°
Pos. des câbles 90° / Pos. dos cabos 90°

Replacement Stators and Rotors WW Version / 60 Hz

3 ~ mit SubMonitor Transmitter 3 ~ with SubMonitor Transmitter	3 ~ avec transm. SubMonitor 3 ~ con trasmettitore SubMonitor	3 ~ con transmissor SubMonitor 3 ~ com transmissor SubMonitor

P_N [kW]	P_N [HP]	Thrust F [N]	U_N [V]	DOL		YΔ*		
				Motor Model No.	Stator Model No.	Motor Model No.	Stator Model No.	Rotor Model No.
4	5,5	15500	200	236 650 60**		236 760 60**		178 117 912K
			230	236 600 60**		236 720 60**		
			380	236 660 60**		236 780 60**		
			460	236 610 60**	305 478 908	236 710 60**	305 478 911	
			575	236 620 60**		236 400 60**		
5,5	7,5	15500	200	236 651 60**		236 761 60**		178 118 911K
			230	236 601 60**		236 721 60**		
			380	236 661 60**		236 781 60**		
			460	236 611 60**	305 479 911	236 711 60**	305 479 914	
			575	236 621 60**		236 401 60**		
7,5	10,0	15500	200	236 652 60**		236 762 60**		178 119 906K
			230	236 602 60**		236 722 60**		
			380	236 662 60**		236 782 60**		
			460	236 612 60**	305 480 913	236 011 60**	305 480 916	
			575	236 622 60**		236 402 60**		
9,3	12,5	15500	200	236 061 60**		236 *** 60**		178 182 906K
			230	236 041 60**		236 *** 60**		
			380	236 031 60**		236 032 60**		
			460	236 001 60**	305 481 902	236 011 60**	305 481 905	
			575	236 *** 60**		236 *** 60**		
11	15,0	15500	200	236 653 60**		236 763 60**		178 120 906K
			230	236 603 60**		236 723 60**		
			380	236 663 60**		236 783 60**		
			460	236 613 60**	305 482 914	236 713 60**	305 482 917	
			575	236 623 60**		236 403 60**		
15	20,0	15500	200	236 654 60**		236 764 60**		178 121 906K
			230	236 604 60**		236 724 60**		
			380	236 664 60**		236 784 60**		
			460	236 614 60**	305 484 914	236 714 60**	305 484 917	
			575	236 624 60**		236 404 60**		
18,5	25,0	15500	200	236 655 60**		236 765 60**		178 122 906K
			230	236 605 60**		236 725 60**		
			380	236 665 60**		236 785 60**		
			460	236 615 60**	305 485 911	236 715 60**	305 485 914	
			575	236 625 60**		236 405 60**		
22	30,0	15500	200	236 656 60**		236 766 60**		178 123 906K
			230	236 606 60**		236 726 60**		
			380	236 666 60**		236 786 60**		
			460	236 616 60**	305 486 915	236 716 60**	305 486 918	
			575	236 626 60**		236 406 60**		
30	40	27500	380	236 667 60**		236 787 60**		178 115 906K
			460	236 617 60**	305 488 905	236 717 60**	305 488 908	
			575	236 627 60**		236 407 60**		
37	50	45500	380	276 668 60**		276 788 60**		305 223 920
			460	276 618 60**	305 489 920	276 718 60**	305 489 919	
			575	276 628 60**		276 **8 60**		
45	60	45000	380	276 669 60**		276 789 60**		305 223 921
			460	276 619 60**	305 490 920	276 719 60**	305 490 919	
			575	276 629 60**		276 **9 60**		

6" Encapsulated Motors 304SS

4 - 30 Kw

Kit A2 15.500N / 4-22kW	Thrust Bearing Kit	incl. Pos.: 26	308 750 120
Kit A3 27.500N / 30kW	Thrust Bearing Kit	incl. Pos.: 26	308 750 200
Kit A4 45.000N / 30kW	Thrust Bearing Kit	incl. Pos.: 26	308750 510
45kN Conversion Kit 4,0 - 30kW		incl. Pos.: 12; 16; 18; 19 ; 20; 21; 22; 23; 24; 26; 30; 41	308 750 500
Kit B2 4 - 30kW	Seal Kit	incl. Pos.: 4; 17; 20; 21, 22, 41	308 800 302
Kit C2	Slinger Kit	incl. Pos.: 1; 2; 3; 37	308 725 302
Kit D4	Screw Kit	incl. Pos.: 5; 19; 24	308 659 302
Kit E* 4 - 30 kW	Radial Bearing Kit	incl. Pos.: 12; 28	308 678 101
* Radial Bearing Parts are unfinished			

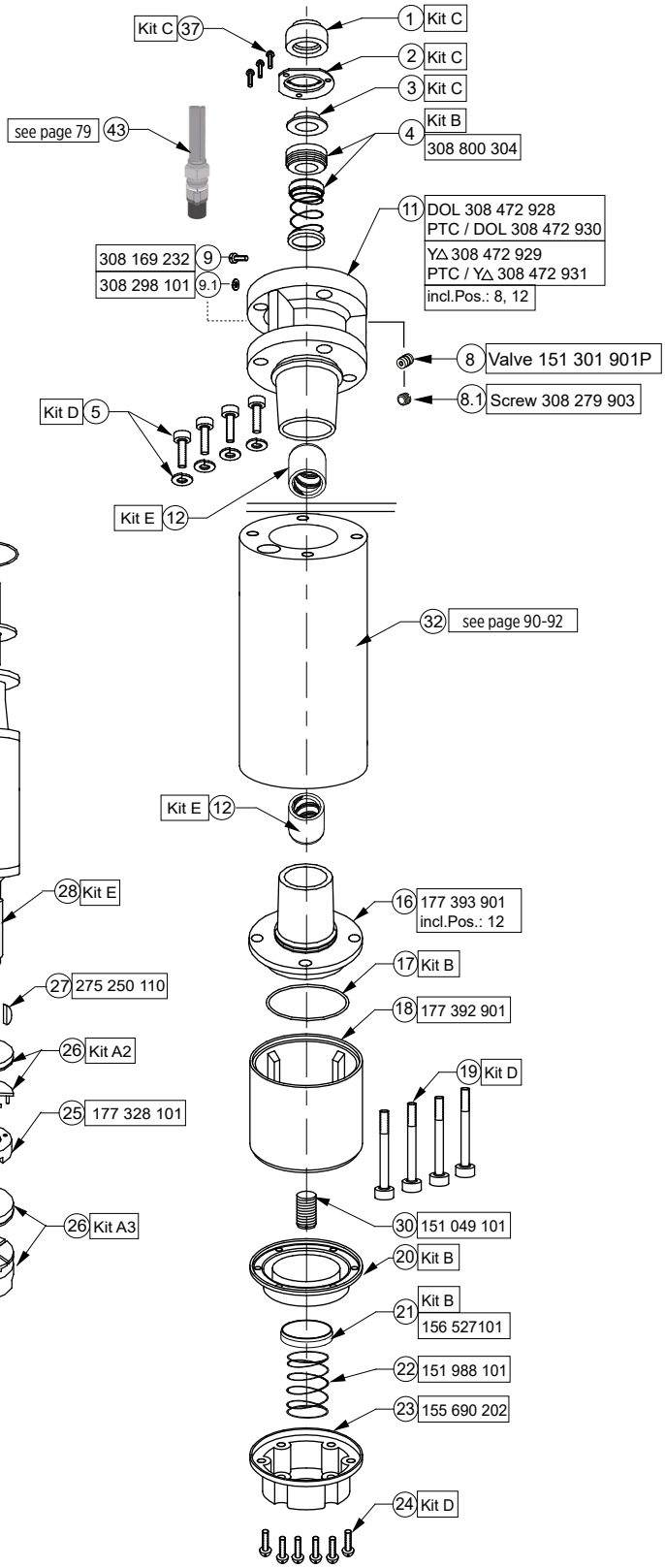

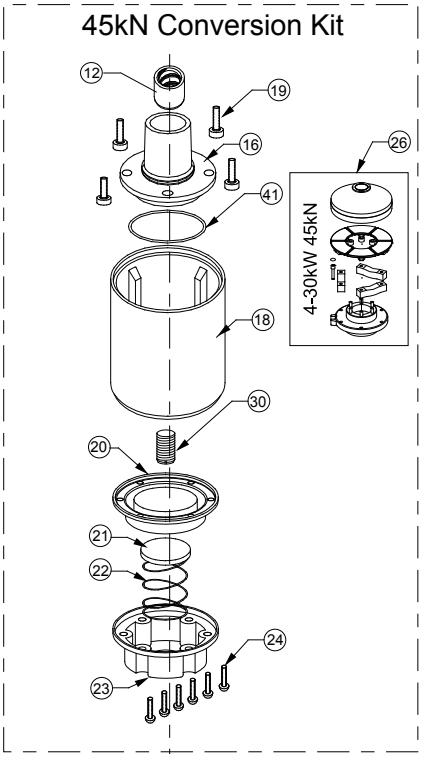

Replacement Stators and Rotors 304SS / 50 Hz		
3 ~ ohne SubMonitor Transmitter 3 ~ without SubMonitor Transmitter	3 ~ sans transm. SubMonitor 3 ~ senza trasmettitore SubMonitor	3 ~ sin transmissor SubMonitor 3 ~ sem transmissor SubMonitor

			DOL		YΔ (*)		
P_N [kW]	Volts	Thrust F [N]	Motor Model No.	Stator Model No.	Motor Model No.	Stator Model No.	Rotor Model No.
4,0	220, 230	15.500	236 680 10**	305 478 ***	236 670 10**	305 478 ***	178 117 912K
	380, 400, 415		236 610 10**	305 478 ***	236 710 10**	305 478 ***	
	500		236 700 10**	305 478 ***	236 790 10**	305 478 ***	
5,5	220, 230	15.500	236 681 10**	305 479 ***	236 671 10**	305 479 ***	178 118 911K
	380, 400, 415		236 611 10**	305 479 ***	236 711 10**	305 479 ***	
	500		236 701 10**	305 479 ***	236 791 10**	305 479 ***	
7,5	220, 230	15.500	236 682 10**	305 480 ***	236 672 10**	305 480 ***	178 119 906K
	380, 400, 415		236 612 10**	305 480 ***	236 712 10**	305 480 ***	
	500		236 702 10**	305 480 ***	236 792 10**	305 480 ***	
9,3	220, 230	15.500	236 015 10**	305 481 ***	236 005 10**	305 481 ***	178 182 906K
	380, 400, 415		236 001 10**	305 481 ***	236 011 10**	305 481 ***	
	500		236 008 10**	305 481 ***	236 018 10**	305 481 ***	
11,0	220, 230	15.500	236 683 10**	305 482 ***	236 673 10**	305 482 ***	178 120 906K
	380, 400, 415		236 613 10**	305 482 ***	236 713 10**	305 482 ***	
	500		236 703 10**	305 482 ***	236 793 10**	305 482 ***	
15,0	220, 230	15.500	236 684 10**	305 484 ***	236 674 10**	305 484 ***	178 121 906K
	380, 400, 415		236 614 10**	305 484 ***	236 714 10**	305 484 ***	
	500		236 704 10**	305 484 ***	236 794 10**	305 484 ***	
18,5	220, 230	15.500	236 685 10**	305 485 ***	236 675 10**	305 485 ***	178 122 906K
	380, 400, 415		236 615 10**	305 485 ***	236 715 10**	305 485 ***	
	500		236 705 10**	305 485 ***	236 795 10**	305 485 ***	
22,0	220, 230	15.500	236 686 10**	305 486 ***	236 676 10**	305 486 ***	178 123 906K
	380, 400, 415		236 616 10**	305 486 ***	236 716 10**	305 486 ***	
	500		236 706 10**	305 486 ***	236 796 10**	305 486 ***	
30,0	220, 230	27.500			236 677 10**	305 488 ***	178 115 906K
	380, 400, 415		236 617 10**	305 488 ***	236 717 10**	305 488 ***	
	500		236 707 10**	305 488 ***	236 797 10**	305 488 ***	

(*) : Kabel 90° versetzt / Pos. of leads 90° / Pos. des câbles 90° / Pos. de cavi 90° / Pos. de los cables 90° / Pos. dos cabos 90°

Replacement Stators and Rotors 304SS / 60 Hz

3 ~ ohne SubMonitor Transmitter 3 ~ without SubMonitor Transmitter	3 ~ sans transm. SubMonitor 3 ~ senza trasmettitore SubMonitor	3 ~ sin transmissor SubMonitor 3 ~ sem transmissor SubMonitor

P_N [kW]	U_N [V]	Thrust F [N]	Stator Model Nr.*	Rotor Model Nr.
4,0	230	15.500		178 117 912K
	460			
	575			
5,5	230	15.500		178 118 911K
	460			
	575			
7,5	230	15.500		178 119 906K
	460			
	575			
9,3	230	15.500		178 182 906K
	460			
	575			
11,0	230	15.500		178 120 906K
	460			
	575			
15,0	230	15.500		178 121 906K
	460			
	575			
18,5	230	15.500		178 122 906K
	460			
	575			
22,0	230	15.500		178 123 906K
	460			
	575			
30,0	230	27.500		178 115 906K
	460			
	575			

(*) Spare part Stators on request

Replacement Stators and Rotors 304SS / 50 Hz

3 ~ mit SubMonitor Transmitter 3 ~ with SubMonitor Transmitter	3 ~ avec transm. SubMonitor 3 ~ con trasmettitore SubMonitor	3 ~ con transmissor SubMonitor 3 ~ com transmissor SubMonitor

			DOL		YΔ (*)		
P_N [kW]	U_N [V]	Thrust F [N]	Motor Model No.	Stator Model No.	Motor Model No.	Stator Model No.	Rotor Model No.
4,0	220, 230	15.500	236 680 11**	305 478 ***	236 670 11**	305 478 ***	178 117 912K
	380, 400, 415		236 610 11**	305 478 ***	236 710 11**	305 478 ***	
	500		236 700 11**	305 478 ***	236 790 11**	305 478 ***	
5,5	220, 230	15.500	236 681 11**	305 479 ***	236 671 11**	305 479 ***	178 118 911K
	380, 400, 415		236 611 11**	305 479 ***	236 711 11**	305 479 ***	
	500		236 701 11**	305 479 ***	236 791 11**	305 479 ***	
7,5	220, 230	15.500	236 682 11**	305 480 ***	236 672 11**	305 480 ***	178 119 906K
	380, 400, 415		236 612 11**	305 480 ***	236 712 11**	305 480 ***	
	500		236 702 11**	305 480 ***	236 792 11**	305 480 ***	
9,3	220, 230	15.500	236 015 11**	305 481 ***	236 005 11**	305 481 ***	178 182 906K
	380, 400, 415		236 001 11**	305 481 ***	236 011 11**	305 481 ***	
	500		236 008 11**	305 481 ***	236 018 11**	305 481 ***	
11,0	220, 230	15.500	236 683 11**	305 482 ***	236 673 11**	305 482 ***	178 120 906K
	380, 400, 415		236 613 11**	305 482 ***	236 713 11**	305 482 ***	
	500		236 703 11**	305 482 ***	236 793 11**	305 482 ***	
15,0	220, 230	15.500	236 684 11**	305 484 ***	236 674 11**	305 484 ***	178 121 906K
	380, 400, 415		236 614 11**	305 484 ***	236 714 11**	305 484 ***	
	500		236 704 11**	305 484 ***	236 794 11**	305 484 ***	
18,5	220, 230	15.500	236 685 11**	305 485 ***	236 675 11**	305 485 ***	178 122 906K
	380, 400, 415		236 615 11**	305 485 ***	236 715 11**	305 485 ***	
	500		236 705 11**	305 485 ***	236 795 11**	305 485 ***	
22,0	220, 230	15.500	236 686 11**	305 486 ***	236 676 11**	305 486 ***	178 123 906K
	380, 400, 415		236 616 11**	305 486 ***	236 716 11**	305 486 ***	
	500		236 706 11**	305 486 ***	236 796 11**	305 486 ***	
30,0	220, 230	27.500			236 677 11**	305 488 ***	178 115 906K
	380, 400, 415		236 617 11**	305 488 ***	236 717 11**	305 488 ***	
	500		236 707 11**	305 488 ***	236 797 11**	305 488 ***	

(*) : **Kabel 90° versetzt** **Pos. de cavi 90°**
Pos. of leads 90° **Pos. de los cables 90°**
Pos. des câbles 90° **Pos. dos cabos 90°**

6″ Encapsulated 316SS 45-30kW

Rotor Kit 6500N to 15.500N	4,0 kW	incl. Pos.: 25; 26, 29	305 330 911
	5,5 kW	incl. Pos.: 25; 26, 29	305 330 912
Kit A2 15.500N / 4-22kW	Thrust Bearing Kit	incl. Pos.: 26	308 750 120
Kit A3 27.500N / 30kW	Thrust Bearing Kit	incl. Pos.: 26	308 750 200
Kit A4 45.000N	Thrust Bearing Kit	incl. Pos.: 26	308 750 510
45kN Conversion Kit 4,0 - 30kW		incl. Pos.: 12; 16; 18; 19; 20; 21; 22; 23; 24; 26; 30; 41	308 750 550
Kit B2 4 - 30kW	Seal Kit	incl. Pos.: 4; 17; 20; 21, 22, 41	308 800 302
Kit C2	Slinger Kit	incl. Pos.: 1; 2; 3; 37	308 725 302
Kit D3 up to 07.2002	Screw Kit	incl. Pos.: 5; 19; 24	308 659 301
Kit D4 starting 07.2002	Screw Kit	incl. Pos.: 5; 19; 24	308 659 302
Kit E* 4 - 30 kW	Radial Bearing Kit	incl. Pos.: 12; 28	308 678 101
* Radial Bearing Parts are unfinished			

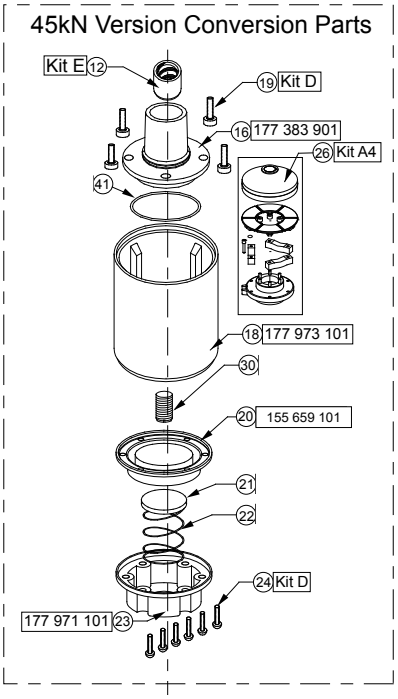

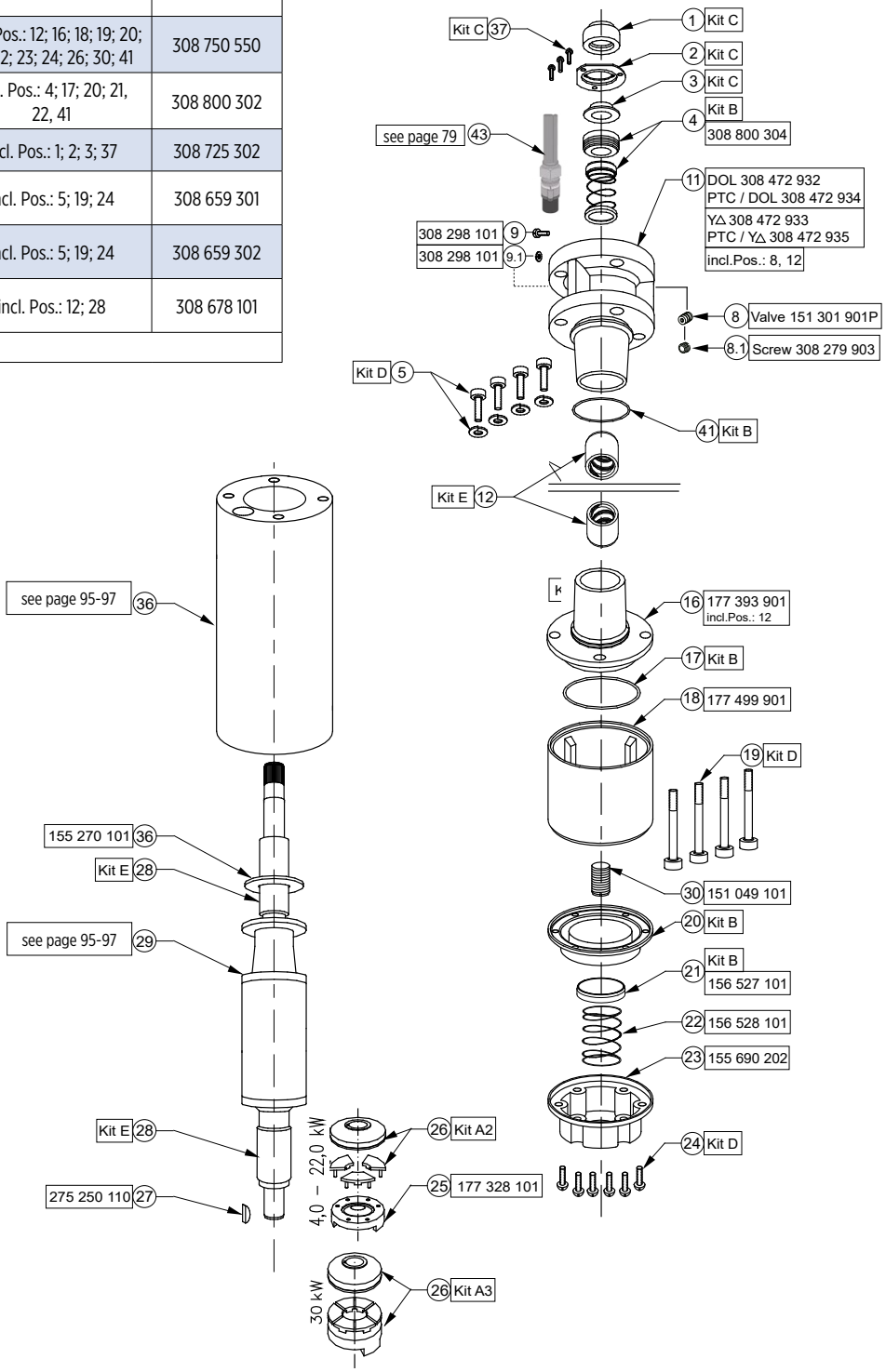

6″ Encapsulated 316SS 37-45kW

Kit A3	Thrust Bearing Kit 27.500N	incl. Pos.: 26	308 750 200
Kit A4	Thrust Bearing Kit 45.000N	incl. Pos.: 26	308 750 510
Kit B3	Seal Kit	incl. Pos.: 4; 17; 20; 21, 41; 44	308 800 250
Kit C4	Slinger Kit	incl. Pos.: 1; 2; 3; 37	308 725 155
Kit D5	Screw Kit	incl. Pos.: 5; 19; 24	308 659 155
Kit E*	Radial Bearing Kit	incl. Pos.: 12; 28	308 678 101
* Radial Bearing Parts are unfinished			

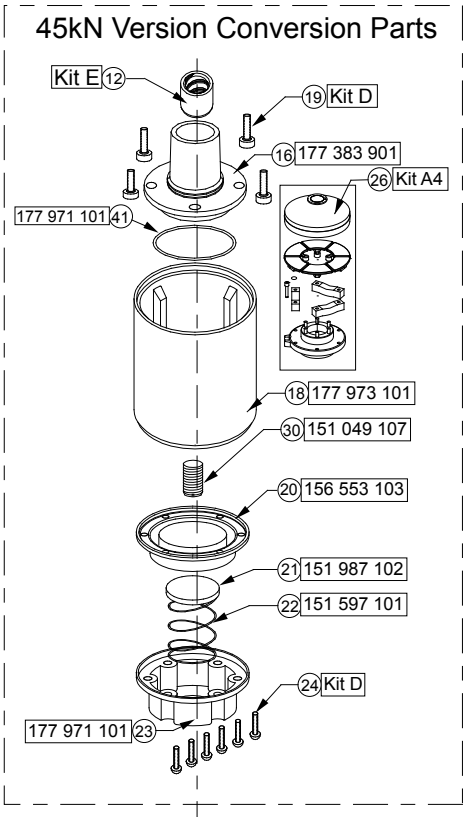

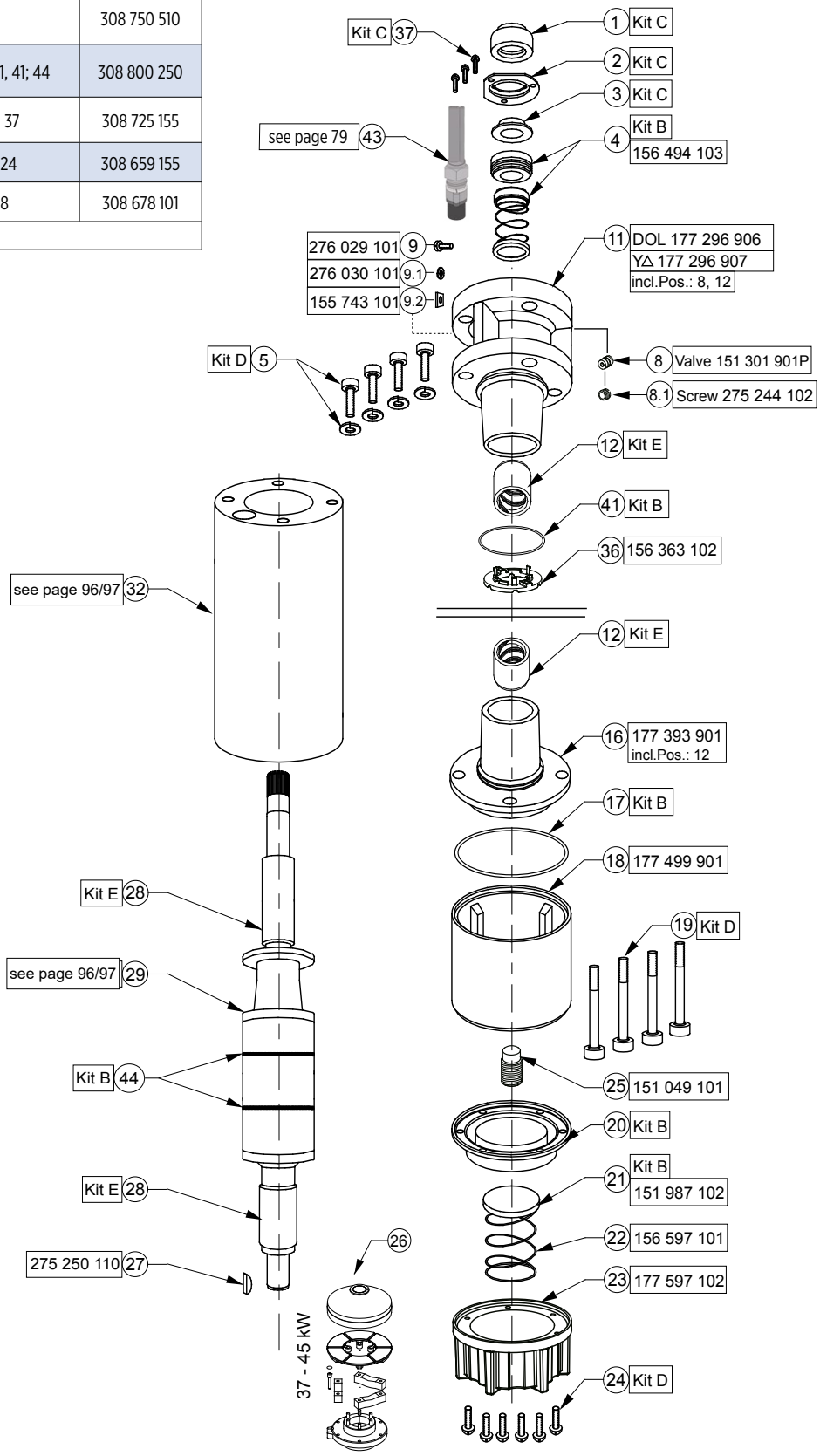

Replacement Stators and Rotors 316SS / 50 Hz

3 ~ ohne SubMonitor Transmitter 3 ~ without SubMonitor Transmitter	3 ~ sans transm. SubMonitor senza trasmettitore SubMonitor	3 ~	3 ~ sin transmissor SubMonitor 3 ~ sem transmissor SubMonitor

			DOL		YΔ (*)		
P_N [kW]	U_N [V]	Thrust (N)	Motor Model No.	Stator Model No.	Motor Model No.	Stator Model No.	Rotor Model No.
4,0	220, 230	15.500	236 680 39**	305478917	236 670 39**	305478920	178 117 913K
	380 - 415		236 610 39**	305478918	236 710 39**	305478921	
	500		236 700 39**	305478919	236 790 39**	305478922	
5,5	220, 230	15.500	236 681 39**	305479920	236 671 39**	305479923	178 118 912K
	380 - 415		236 611 39**	305479921	236 711 39**	305479924	
	500		236 701 39**	305479922	236 791 39**	305479925	
7,5	220, 230	15.500	236 682 39**	305480922	236 672 39**	305480925	178 119 908K
	380 - 415		236 612 39**	305480923	236 712 39**	305480926	
	500		236 702 39**	305480924	236 792 39**	305480927	
9,3	220, 230	15.500	236 015 39**	305481911	236 005 39**	305481914	178 182 907K
	380 - 415		236 001 39**	305481912	236 011 39**	305481915	
	500		236 008 39**	305481913	236 018 39**	305481916	
11,0	220, 230	15.500	236 683 39**	305482923	236 673 39**	305482926	178 120 908K
	380 - 415		236 613 39**	305482924	236 713 39**	305482927	
	500		236 703 39**	305482925	236 793 39**	305482928	
15,0	220, 230	15.500	236 684 39**	305484923	236 674 39**	305484926	178 121 907K
	380 - 415		236 614 39**	305484924	236 714 39**	305484927	
	500		236 704 39**	305484925	236 794 39**	305484928	
18,5	220, 230	15.500	236 685 39**	305485920	236 675 39**	305485923	178 122 907K
	380 - 415		236 615 39**	305485921	236 715 39**	305485924	
	500		236 705 39**	305485922	236 795 39**	305485926	
22,0	220, 230	15.500	236 686 39**	305486924	236 676 39**	305486927	178 123 907K
	380 - 415		236 616 39**	305486925	236 716 39**	305486928	
	500		236 706 39**	305486926	236 796 39**	305486929	
30,0	220, 230	27.500			236 677 39**	305488915	178 115 906K
	380 - 415		236 617 39**	305488913	236 717 39**	305488916	
	500		236 707 39**	305488914	236 797 39**	305488917	

(*) : **Kabel 90° versetzt** **Pos. de cavi 90°**
Pos. of leads 90° **Pos. de los cables 90°**
Pos. des câbles 90° **Pos. dos cabos 90°**

Replacement Stators and Rotors 316SS / 50 Hz

3 ~ mit SubMonitor Transmitter 3 ~ with SubMonitor Transmitter	3 ~ avec transm. SubMonitor 3 ~ con trasmettitore SubMonitor	3 ~ con transmissor SubMonitor 3 ~ com transmissor SubMonitor

			DOL		YΔ (*)		Rotor Model No.
P_N [kW]	U_N [V]	Thrust F (N)	Motor Model No.	Stator Model No.	Motor Model No.	Stator Model No.	
4,0	220, 230	15.500	236 680 40**	305 478 947	236 670 40**	305 478 950	178 117 913K
	380 - 415		236 610 40**	305 478 948	236 710 40**	305 478 951	
	500		236 700 40**	305 478 949	236 790 40**	305 478 952	
5,5	220, 230	15.500	236 681 40**	305 479 950	236 671 40**	305 479 953	178 118 912K
	380 - 415		236 611 40**	305 479 951	236 711 40**	305 479 954	
	500		236 701 40**	305 479 952	236 791 40**	305 479 955	
7,5	220, 230	15.500	236 682 40**	305 480 952	236 672 40**	305 480 955	178 119 908K
	380 - 415		236 612 40**	305 480 953	236 712 40**	305 480 956	
	500		236 702 40**	305 480 954	236 792 40**	305 480 957	
9,3	220, 230	15.500	236 015 40**	305 481 941	236 005 40**	305 481 944	178 182 907K
	380 - 415		236 001 40**	305 481 942	236 011 40**	305 481 945	
	500		236 008 40**	305 481 943	236 018 40**	305 481 946	
11,0	220, 230	15.500	236 683 40**	305 482 953	236 673 40**	305 482 956	178 120 908K
	380 - 415		236 613 40**	305 482 954	236 713 40**	305 482 957	
	500		236 703 40**	305 482 955	236 793 40**	305 482 958	
15,0	220, 230	15.500	236 684 40**	305 484 953	236 674 40**	305 484 956	178 121 907K
	380 - 415		236 614 40**	305 484 954	236 714 40**	305 484 957	
	500		236 704 40**	305 484 955	236 794 40**	305 484 958	
18,5	220, 230	15.500	236 685 40**	305 485 950	236 675 40**	305 485 953	178 122 907K
	380 - 415		236 615 40**	305 485 951	236 715 40**	305 485 954	
	500		236 705 40**	305 485 952	236 795 40**	305 485 955	
22,0	220, 230	15.500	236 686 40**	305 486 954	236 676 40**	305 486 957	178 123 907K
	380 - 415		236 616 40**	305 486 955	236 716 40**	305 486 958	
	500		236 706 40**	305 486 956	236 796 40**	305 486 959	
30,0	220, 230	27.500			236 677 40**	305 488 939	178 115 906K
	380 - 415		236 617 40**	305 488 937	236 717 40**	305 488 940	
	500		236 707 40**	305 488 938	236 797 40**	305 488 941	
37,0	380 - 415	45.000	276 618 6361X	338 710 908	276 718 6361X	336 755 906	305 223 920
45,0	380 - 415	45.000	276 619 6361X	305 490 921	276 719 6361X	336 756 103	305 223 921

(*) : Kabel 90° versetzt / Pos. of leads 90° / Pos. des câbles 90° / Pos. de cavi 90° / Pos. de los cables 90° / Pos. dos cabos 90°

Replacement Stators and Rotors 316SS / 60 Hz

3 ~ mit SubMonitor Transmitter 3 ~ with SubMonitor Transmitter	3 ~ avec transm. SubMonitor con trasmettitore SubMonitor	3 ~	3 ~ con transmissor SubMonitor 3 ~ com transmissor SubMonitor

P_N [kW]	P_N [HP]	Thrust F [N]	U_N [V]	DOL		YΔ*		Rotor Model No.
				Motor Model No.	Stator Model No.	Motor Model No.	Stator Model No.	
4	5,5	15500	200	236 650 40**		236 760 40**		178 117 913K
			230	236 600 40**		236 720 40**		
			380	236 660 40**		236 780 40**		
			460	236 610 40**	305 478 948	236 710 40**	305 478 951	
			575	236 620 40**		236 400 40**		
5,5	7,5	15500	200	236 651 40**		236 761 40**		178 118 912K
			230	236 601 40**		236 721 40**		
			380	236 661 40**		236 781 40**		
			460	236 611 40**	305 479 951	236 711 40**	305 479 954	
			575	236 621 40**		236 401 40**		
7,5	10,0	15500	200	236 652 40**		236 762 40**		178 119 908K
			230	236 602 40**		236 722 40**		
			380	236 662 40**		236 782 40**		
			460	236 612 40**	305 480 953	236 011 40**	305 480 956	
			575	236 622 40**		236 402 40**		
9,3	12,5	15500	200	236 061 40**		236 *** 40**		178 182 907K
			230	236 041 40**		236 *** 40**		
			380	236 031 40**		236 032 40**		
			460	236 001 40**	305 481 942	236 011 40**	305 481 945	
			575	236 *** 40**		236 *** 40**		
11	15,0	15500	200	236 653 40**		236 763 40**		178 120 908K
			230	236 603 40**		236 723 40**		
			380	236 663 40**		236 783 40**		
			460	236 613 40**	305 482 954	236 713 40**	305 482 957	
			575	236 623 40**		236 403 40**		
15	20,0	15500	200	236 654 40**		236 764 40**		178 121 907K
			230	236 604 40**		236 724 40**		
			380	236 664 40**		236 784 40**		
			460	236 614 40**	305 484 954	236 714 40**	305 484 957	
			575	236 624 40**		236 404 40**		
18,5	25,0	15500	200	236 655 40**		236 765 40**		178 122 907K
			230	236 605 40**		236 725 40**		
			380	236 665 40**		236 785 40**		
			460	236 615 40**	305 485 951	236 715 40**	305 485 954	
			575	236 625 40**		236 405 40**		
22	30,0	15500	200	236 656 40**		236 766 40**		178 123 907K
			230	236 606 40**		236 726 40**		
			380	236 666 40**		236 786 40**		
			460	236 616 40**	305 486 955	236 716 40**	305 486 958	
			575	236 626 40**		236 406 40**		
30	40	27500	380	236 667 40**		236 787 40**		178 115 906K
			460	236 617 40**	305 488 937	236 717 40**	305 488 940	
			575	236 627 40**		236 407 40**		
37	50	45000	380	276 668 40**		276 788 40**		305 223 920
			460	276 618 40**	338 710 909	276 718 40**	305 489 ***	
			575	276 628 40**		276 **8 40**		
45	60	45000	380	276 669 40**		276 789 40**		305 223 921
			460	276 619 40**	305 490 921	276 719 40**	305 490 ***	
			575	276 629 40**		276 **9 40**		

(*) : Kabel 90° versetzt / Pos. of leads 90° / Pos. des câbles 90° / Pos. de cavi 90° / Pos. de los cables 90° / Pos. dos cabos 90°

6″ Encapsulated Motors „HighTemp 90°C“

Encapsulated motor for reliable operation with ambient temperatures up to 90 °C

High Temp

SAND FIGHTER

WATER WELL WW CI PC / 304SS

STAINLESS STEEL 316

Submersible Motors

Quality in the Well

These 6″ encapsulated motors are built for dependable operation in 6″ diameter or larger water wells with ambient temperature up to 90°C.
Water lubricated thrust and radial bearings enable a maintenance free operation. A special diaphragm ensures pressure compensation inside the motor. The motor is filled with a special FES92 fluid, providing frost protection down to -15ºC storage temperture.
The Sand fighter® SiC seal system is standard.

Product advantages:

- Up to 90°C ambient temperature
- VFD operation is possible up to a rated voltage of 400V (in compliance with the application guidelines in the motor operating instructions and the VFD manufacturer). For VFD operation with higher voltages, please consult Franklin Electric.
- Increast thrust capacity up to 30°C
- No cooling flow in larger wells (12″ / open reservoirs) up to 30°C ambient
- Hermetically sealed encapsulated stator, anti track, self healing stator resin
- Removable “Water Bloc” lead connector
- „Sand fighter®“ Motor with SiC-Mechanical Seal
- High efficiency electrical design for low operation cost
- Standard Motor: WW- Water well Design (Stator 304SS / Castings - CI Powder coated)
- All motors prefilled and 100% tested. Max. storage temperature -15°C - + 60°C
- High temperature leads
- Non contaminating FES92 -filled design

Technical Specifications

- 3,7 ... 30 kW
- 6″ NEMA double flange
- Protection: IP 68
- Starts per hour: 20
- Installation: vertical/horizontal
- Standard Voltage: 380-415V/50Hz, 460V/60Hz
- Voltage tolerance 50Hz: -10% / +6% U_N [380-415V = (380-10%) – (415+6%)]
- Voltage tolerance 60Hz: ±10%U_N
- Motor protection: Select thermal overloads according to DIN 61947-4-1
- Insulation: Class F
- Rated ambient temperature: 90°C
- Cooling flow: min. 0,16 m/s
- DOL / YΔ - start (pos. of cables 90°)
- Motor cable in the standard with 5m length 3X8,4mm² and 5m single conductor ground wire round cable mounted on the motor

Options

- Other voltages
- 45kN Thrust Bearing capacity (Standard in 22 and 30kW motors)
- Motors complete in 316 SS
- Motor lead 8m length

6″ HighTemp90 Model numbers 50 Hz*

P_N [kW]	P_N [Hp]	U_N [V]	Model Number Digit 1 – 6		Model Number Digit 7 - 11	
			DOL	YΔ	WW**	316SS
3,7	5	380 - 415	276 610	276 710	0000	3000
5,5	7,5	380 - 415	276 611	276 711	0000	3000
7,5	10	380 - 415	276 612	276 712	0000	3000
11	15	380 - 415	276 613	276 713	0000	3000
15	20	380 - 415	276 614	276 714	0000	3000
18,5	25	380 - 415	276 615	276 715	0100	3100
22	30	380 - 415	276 616	276 716	0100	3100
30	40	380 - 415	276 617	276 717	0100	3100

6″ HighTemp90 Model numbers 60 Hz*

P_N [kW]	$P_{max.}$ [kW]	U_N [V]	Model Number Digit 1 – 6		Model Number Digit 7 - 11		
			DOL	YΔ	WW**	316SS	High Thrust 45 kN Motor Version
3,7	**4,3**	230	276 600	276 720	0000	3000	**63
		380	276 660	276 780	0000	3000	**63
		460	276 610	276 710	0000	3000	**63
5,5	**6,3**	230	276 601	276 721	0000	3000	**63
		380	276 661	276 781	0000	3000	**63
		460	276 611	276 711	0000	3000	**63
7,5	**8,6**	230	276 602	276 722	0000	3000	**63
		380	276 662	276 782	0000	3000	**63
		460	276 612	276 712	0000	3000	**63
11	**12,7**	230	276 603	276 723	0000	3000	**63
		380	276 663	276 783	0000	3000	**63
		460	276 613	276 713	0000	3000	**63
15	**17,2**	230	276 604	276 724	0000	3000	**63
		380	276 664	276 784	0000	3000	**63
		460	276 614	276 714	0000	3000	**63
18,5	**21,3**	230	276 605	276 725	0100	3100	**63
		380	276 665	276 785	0100	3100	**63
		460	276 615	276 715	0100	3100	**63
22	**25,3**	230	276 606	276 726	0100	3100	Standard
		380	276 666	276 786	0100	3100	Standard
		460	276 616	276 716	0100	3100	Standard
30	**34,5**	230	276 607	276 727	0100	3100	Standard
		380	276 667	276 787	0100	3100	Standard
		460	276 617	276 717	0100	3100	Standard

* VFD operation is only allowed up to 400V supply voltage, for higher voltages please consult Franklin Electric Europa GmbH

** WW- Water well Design (Stator 304SS / Castings - CI Powder coated)

6″ HighTemp 90 Performance Data 50 Hz

P_N [kW]	Thrust F [N]	U_N [V]	n_N [min⁻¹]	I_N [A]	I_A [A]	η (Eff.) [%] at % load			cos φ (Pf.) at % load			T_N [Nm]	T_A [Nm]
						50	75	100	50	75	100		
3,7	15.500	380	2865	8,8	49,9	66	72	74	0,78	0,85	0,88	12,4	27,9
		400	2880	8,5	52,5	66	72	75	0,74	0,82	0,86	12,3	31,4
		415	2890	8,4	54,5	65	72	75	0,70	0,79	0,84	12,3	34,2
5,5	15.500	380	2880	12,7	78,6	70	75	77	0,77	0,85	0,88	18,6	42,8
		400	2890	12,3	83,0	70	75	77	0,72	0,81	0,86	18,4	48,3
		415	2900	12,3	86,0	69	75	77	0,67	0,77	0,84	18,4	52,4
7,5	15.500	380	2880	16,4	105	74	78	80	0,76	0,84	0,88	24,7	68,1
		400	2890	16,0	110	74	79	81	0,69	0,79	0,85	24,5	76,6
		415	2900	16,1	114	71	77	80	0,65	0,76	0,83	24,5	83,4
11,0	15.500	380	2880	24,4	152	75	79	80	0,74	0,83	0,85	37,0	99,1
		400	2890	24,2	160	74	79	80	0,67	0,77	0,82	36,9	111,4
		415	2895	24,4	166	73	78	79	0,61	0,73	0,79	36,7	123,5
15,0	15.500	380	2865	33,3	195	76	79	80	0,73	0,82	0,87	49,6	143,7
		400	2885	33,0	205	75	79	80	0,65	0,77	0,83	49,4	161,3
		415	2890	33,3	213	74	78	80	0,60	0,72	0,80	49,2	196,6
18,5	27.500	380	2870	40,7	253	79	82	82	0,70	0,80	0,86	61,9	199,3
		400	2890	40,5	266	78	82	83	0,62	0,74	0,82	61,5	227,8
		415	2895	41,4	276	76	80	82	0,57	0,69	0,78	61,4	248,1
22	45.000	380	2870	49,2	289	76	79	80	0,76	0,83	0,88	74,3	196,6
		400	2885	48,0	304	75	79	81	0,70	0,80	0,85	74,0	221,0
		415	2895	47,9	316	74	79	80	0,65	0,76	0,82	73,8	241,3
30	45.000	380	2870	65,0	419	80	82	83	0,70	0,80	0,86	99,2	267,1
		400	2885	64,5	441	79	82	83	0,63	0,75	0,82	98,7	301,0
		415	2895	65,6	458	77	81	83	0,58	0,70	0,78	98,4	326,7

Electrical Connection

DOL

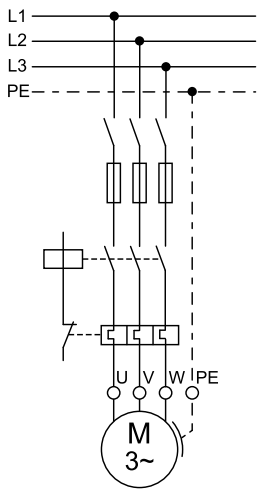

YΔ

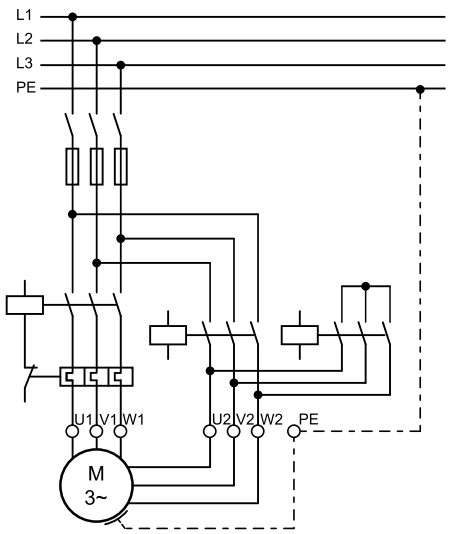

U	V	W	PE
black	white	red	green

6″ HighTemp 90 Performance Data 60 Hz

P_N [kW]	P_{max} [kW]	Thrust [N]	U_N [V]	Hz	n [min^{-1}]	I_{max} [A]	I_A [A]	LINE TO LINE RESISTANCE OHMS
4,0	**4,6**	15.500	230	60	3450	17.2	108	.68 - .84
			380	60	3450	10.4	66.0	2.0 - 2.4
			460	60	3450	8.6	54.0	2.8 - 3.4
			575	60	3450	6.9	43.0	4.7 - 5.7
5,5	**6,3**	15.500	230	60	3450	24.6	168	.41 - .50
			380	60	3450	14.9	102	1.1 - 1.4
			460	60	3450	12.3	84.0	1.7 - 2.0
			575	60	3450	9.9	67.0	2.6 - 3.2
7,5	**8,6**	15.500	230	60	3450	31.6	238	.28 - .35
			380	60	3450	19.2	144	.80 - .98
			460	60	3450	15.8	119	1.2 - 1.4
			575	60	3450	12.7	95.0	1.8 - 2.2
11	**12,7**	15.500	230	60	3450	47.4	354	.19 - .24
			380	60	3450	28.7	214	.52 - .65
			460	60	3450	23.7	177	.78 - .96
			575	60	3450	19.0	142	1.2 - 1.4
15	**17,3**	15.500	230	60	3450	64.0	418	.14 - .18
			380	60	3450	38.8	253	.41 - .51
			460	60	3450	32.0	209	.58 - .72
			575	60	3450	25.6	167	.93 - 1.15
18,5	**21,3**	27.500	230	60	3450	78.8	578	.11 - .14
			380	60	3450	47.7	350	.27 - .34
			460	60	3450	39.4	289	.41 - .51
			575	60	3450	31.6	231	.70 - .86
22	**25,3**	45.000	230	60	3450	94.4	640	.09 - .12
			380	60	3450	57.2	387	.23 - .29
			460	60	3450	47.2	320	.34 - .42
			575	60	3450	37.8	256	.52 - .65
30	**34,5**	45.000	380	60	3450	76.0	545	.18 - .23
			460	60	3450	62.8	450	.23 - .29
			575	60	3450	50.2	360	.34 - .43

6″ High Temp 90 Motor Leads* WW / 316SS

P_N [kW]	Jam Nut Material	L [m]	Ø [mm^2]	H [mm]	B [mm]	Part numbers
All Ratings	316 SS	5	3 x 8,4 mm^2	23,1 mm (±0,3mm)	11 mm (±0,3mm)	305 602 905
		8				305 602 906

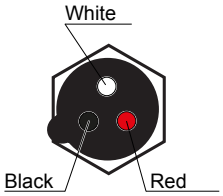

Ground lead

	P [kW]	Ø [mm^2]	D [mm]	Type	Qty.	L (m)	Mod. Nb. WW/316SS
	**4,0 - 30**	1G8,4 mm^2	7,6 mm (±0,3)	VDE	1	5	152 764 901

*Cables are designed for submerged operation. For air operation please consult Franklin Electric.

6" HighTemp 90 Encapsulated WW 4-30kW

Kit A2	Thrust Bearing 15.500N	Incl.Pos.: 26	308 750 120
Kit A3	Thrust Bearing 27.500N	Incl.Pos.: 26	308 750 200
Kit A4	Thrust Bearing 45.000N	Incl.Pos.: 26	308 750 510
45kN Conversion Kit A4 4,0 - 30kW		incl. Pos.: 12; 16; 17; 18; 19 ; 20; 21; 22; 23; 24; 26; 30	308 750 500
Kit B3	Seal Kit	Incl.Pos.: 4; 17; 20; 21; 41; 44	308 800 250
Kit C4	Slinger Kit	Incl.Pos.: 1; 2; 3; 37	308 725 155
Kit D5	Screw Kit	Incl.Pos.: 5; 19; 24	308 659 155
Kit E*	Radial Bearing Kit	Incl.Pos.: 12; 28	308 678 101

* Parts are unfinished

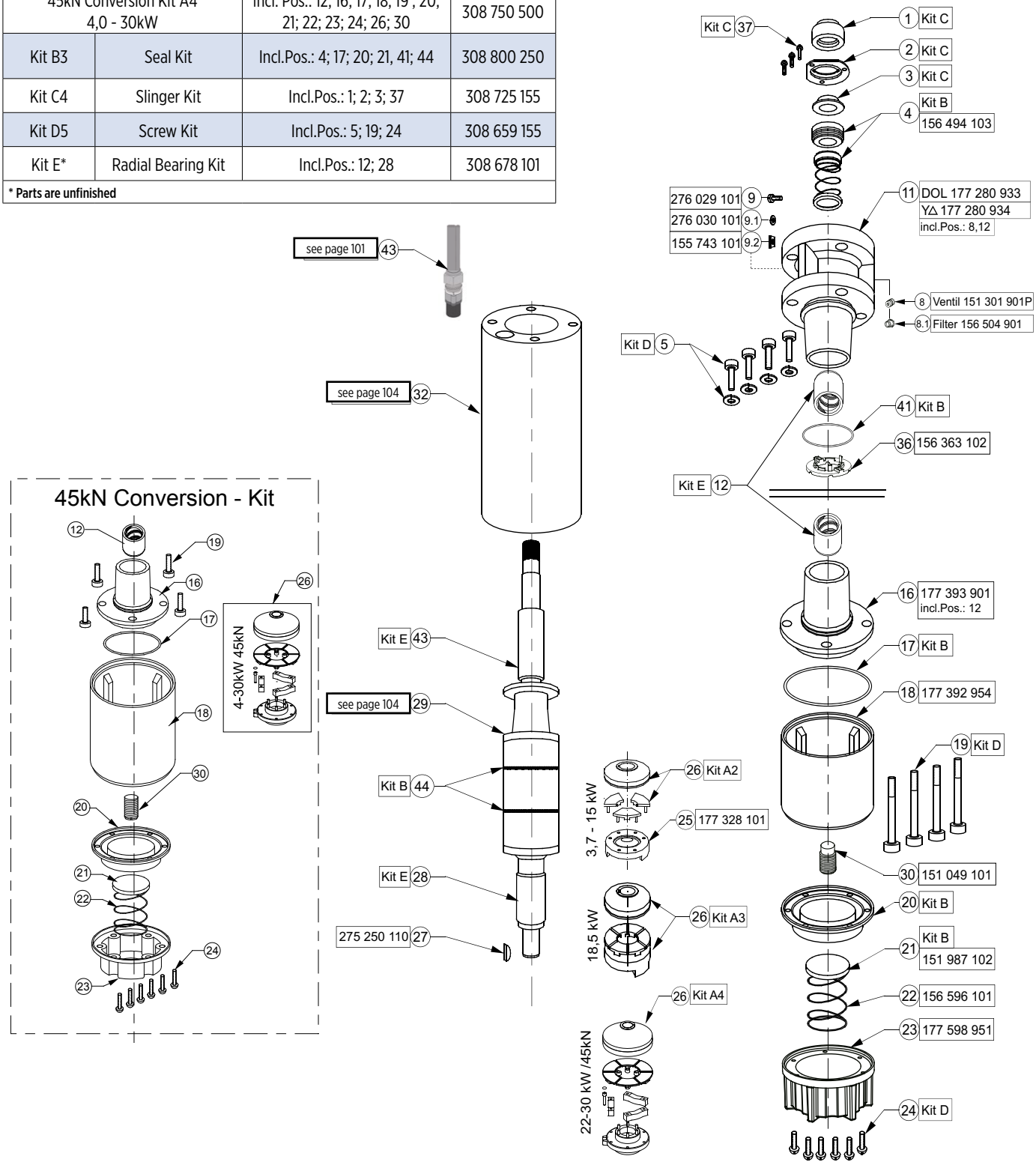

6″ HighTemp 90 Encapsulated 316SS 4-30kW

Kit A2	Thrust Bearing 15.500N	Inkl.Pos.: 26	308 750 120
Kit A3	Thrust Bearing 27.500N	Inkl.Pos.: 26	308 750 200
Kit A4	Thrust Bearing 45.000N	Inkl.Pos.: 26	308 750 510
Kit B3	Seal Kit	Inkl.Pos.: 4; 17; 20; 21, 41; 44	308 800 250
Kit C4	Slinger Kit	Inkl.Pos.: 1; 2; 3; 37	308 725 155
Kit D5	Screw Kit	Inkl.Pos.: 5; 19; 24	308 659 155
Kit E*	Radial Bearing Kit	Inkl.Pos.: 12; 28	308 678 101
* Parts are unfinished			

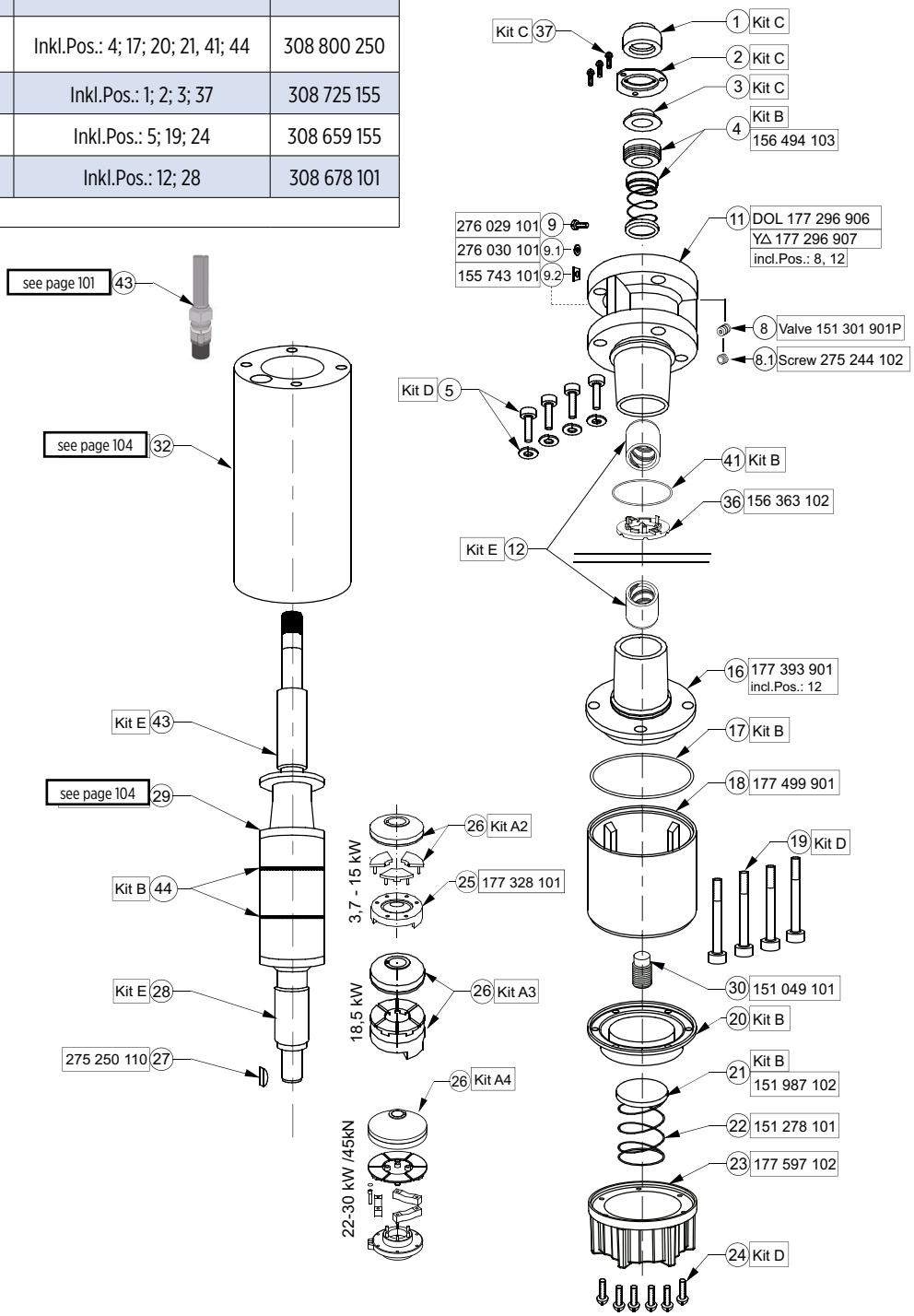

6″ HighTemp 90 Replacement Stators and Rotors 50 Hz

P_N [kW]	U_N [V]	Thrust F [N]	DOL		YΔ		Rotor 316 Model No.
			Motor Model No.	Stator 316 Model No.	Motor Model No.	Stator 316 Model No.	
3,7	380 - 415	45.000	276 610 *****	331 634 903	276 710 *****	331 665 903	305 575 901
5,5	380 - 415	45.000	276 611 *****	331 635 903	276 711 *****	331 666 903	305 575 902
7,5	380 - 415	45.000	276 612 *****	331 636 903	276 712 *****	331 667 903	305 575 903
11,0	380 - 415	45.000	276 613 *****	305 482 974	276 713 *****	331 668 903	305 575 904
15,0	380 - 415	45.000	276 614 *****	331 616 903	276 714 *****	331 617 903	305 575 905
18,5	380 - 415	45.000	276 615 *****	305 485 972	276 715 *****	331 669 903	305 575 906
22,0	380 - 415	45.000	276 616 *****	305 486 976	276 716 *****	331 614 903	305 223 920
30,0	380 - 415	45.000	276 617 *****	305 488 954	276 717 *****	331 670 903	305 223 921

6″ HighTemp 90 Replacement Stators and Rotors 60 Hz

P_{max} [kW]	U_N [V]	Thrust F [N]	DOL		YΔ		Rotor 316 Model No.
			Motor Model No.	Stator 316 Model No.	Motor Model No.	Stator 316 Model No.	
4,3	230	45.000	276 600	331 *** ***	276 720	331 *** ***	305 575 901
	380	45.000	276 660	331 *** ***	276 780	331 *** ***	
	460	45.000	276 610	331 *** ***	276 710	331 *** ***	
6,3	230	45.000	276 601	331 *** ***	276 721	331 *** ***	305 575 902
	380	45.000	276 661	331 *** ***	276 781	331 *** ***	
	460	45.000	276 611	331 *** ***	276 711	331 *** ***	
8,6	230	45.000	276 602	331 *** ***	276 722	331 *** ***	305 575 903
	380	45.000	276 662	331 *** ***	276 782	331 *** ***	
	460	45.000	276 612	331 *** ***	276 712	331 *** ***	
12,7	230	45.000	276 603	331 *** ***	276 723	331 *** ***	305 575 904
	380	45.000	276 663	331 *** ***	276 783	331 *** ***	
	460	45.000	276 613	331 *** ***	276 713	331 *** ***	
17,2	230	45.000	276 604	331 *** ***	276 724	331 *** ***	305 575 905
	380	45.000	276 664	331 *** ***	276 784	331 *** ***	
	460	45.000	276 614	331 *** ***	276 714	331 *** ***	
21,3	230	45.000	276 605	331 *** ***	276 725	331 *** ***	305 575 906
	380	45.000	276 665	331 *** ***	276 785	331 *** ***	
	460	45.000	276 615	305 485 902	276 715	331 *** ***	
25,3	230	45.000	276 606	331 *** ***	276 726	331 *** ***	305 223 920
	380	45.000	276 666	331 *** ***	276 786	331 *** ***	
	460	45.000	276 616	331 *** ***	276 716	331 *** ***	
34,5	230	45.000	276 607	331 *** ***	276 727	331 *** ***	305 223 921
	380	45.000	276 667	331 *** ***	276 787	331 *** ***	
	460	45.000	276 617	305 488 954	276 717	331 *** ***	

6″ HighTemp 90 Motor Design 4 - 30 kW

WW / 316SS

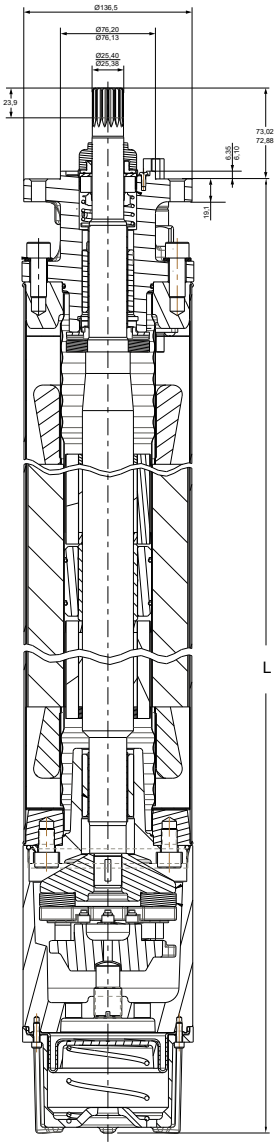

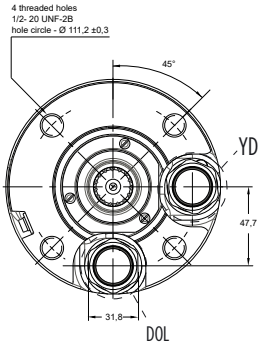

Material DIN / AISI

Part	WW	316 SS
Shell	1.4301	1.4571
Upper end bell	Cast iron powder coated	1.4408
Thrust housing	Cast iron powder coated	1.4408
Mechanical seal	SiC / SiC	SiC / SiC
Seal cover	1.4301	1.4401
Slinger	Viton	Viton
Shaft end	1.4305	1.4542
Diaphragm	Viton	Viton
Lead	Special compound based on PVC	
Jam Nut (Lead)	1.4401	1.4401
Lead bushing	1.4401	1.4401

Motor Sizes

P_N [kW]	WW / 316SS L [mm]	Motor Package Size [mm]	Shipping Weight [kg]
4	670,5	222 x 267 x 876	53
5,5	735,5	222 x 267 x 940	59
7,5	800,6	222 x 267 x 1073	66
11	866	222 x 267 x 1073	71
15	931	222 x 267 x 1302	79
18,5	1061	222 x 267 x 1302	92
22	1429	223 x 267 x 1823	136
30	1581,6	223 x 267 x 1823	150

6" 3~ ENCAPSULATED PERMANENT MAGNET MOTOR

WATER WELL WW CI PC / 304SS

STAINLESS STEEL 304

STAINLESS STEEL 316

SAND FIGHTER

BENEFITS & FEATURES

- Motors for operation with Variable frequency drive (VFD)
- Double-flange NEMA mounting design
- Stainless steel splined shaft
- StatorShield™ - Franklin encapsulation system
- Factory filled with Franklin's non-toxic water soluble fill solution
- High capacity Kingsbury type liquid lubricated thrust bearing for 100 % maintenance free operation
- Field replaceable lead using Franklin's exclusive Water Bloc technology
- Pressure-equalizing diaphragm, spring pre-loaded
- SandFighter™ sealing system with SIC mechanical seal and sand slinger
- High efficiency electrical design for low operation costs
- Drinking water approvals

STANDARD SPECIFICATION

- Ratings: 4 - 45 kW (100 Hz - 3000 rpm)
- Thrust load: 15.5 kN: 4 - 22 kW, 27.5 kN: 26 - 45 kW
- System Supply Voltage: 380 V (100 Hz)
- DOL- start
- Voltage Tolerance: ±10 % U_N
- Nominal ambient temperature: 30 °C
  4 - 22 kW: with 0.16 m/s cooling flow; > 22 kW: with 0.5 m/s cooling flow
- Protection IP68 and insulation class F
- Standard Motor: WW- Water well Design (Stator 304SS / Castings - CI Powder coated)
- Frequency of starts: 20 starts/hour (with min. 3 minutes resting time), equally distributed
- Motors installation orientation: Vertical / horizontal (shaft end heightened)
- Rotation counter clock wise facing shaft end (Rotation reversible)
- All motors with factory installed leads

OPTIONS

- Higher-graded materials: 304SS, 316SS
- Retrofitable PT 100 temperature sensor
  (VFD PT100 Plug-in card necessary, order no. 308 170 202)
- Special lead lengths
- High Thrust design 45 kN
- 120 Hz electrical design

3~ DOL MODEL NUMBERS 380 V / 100 HZ***

P_N [kW]	U_N [V]	Thrust F [N]	Digit 1 - 6	Digit 7 - 10		
				WW**	304SS	Standard 316SS
				Single pack with pre-installed lead*	Single pack with pre-installed lead*	Single pack with pre-installed lead*
4 - 11	380	15.500	236 080	9561	1461	1561
13 - 22	380	15.500	236 084	9561	1461	1561
26 - 45	380	27.500	236 086	9561	1461	1561

* with 4 m motor short lead
** WW (Water well)- Stator 304SS / Castings - CI Powder coated
*** PM motors are to be operated by Variable frequency drive (VFD)

6" 3~ ENCAPSULATED PERMANENT MAGNET MOTOR

EFFICIENCY CURVE AT 3000 RPM

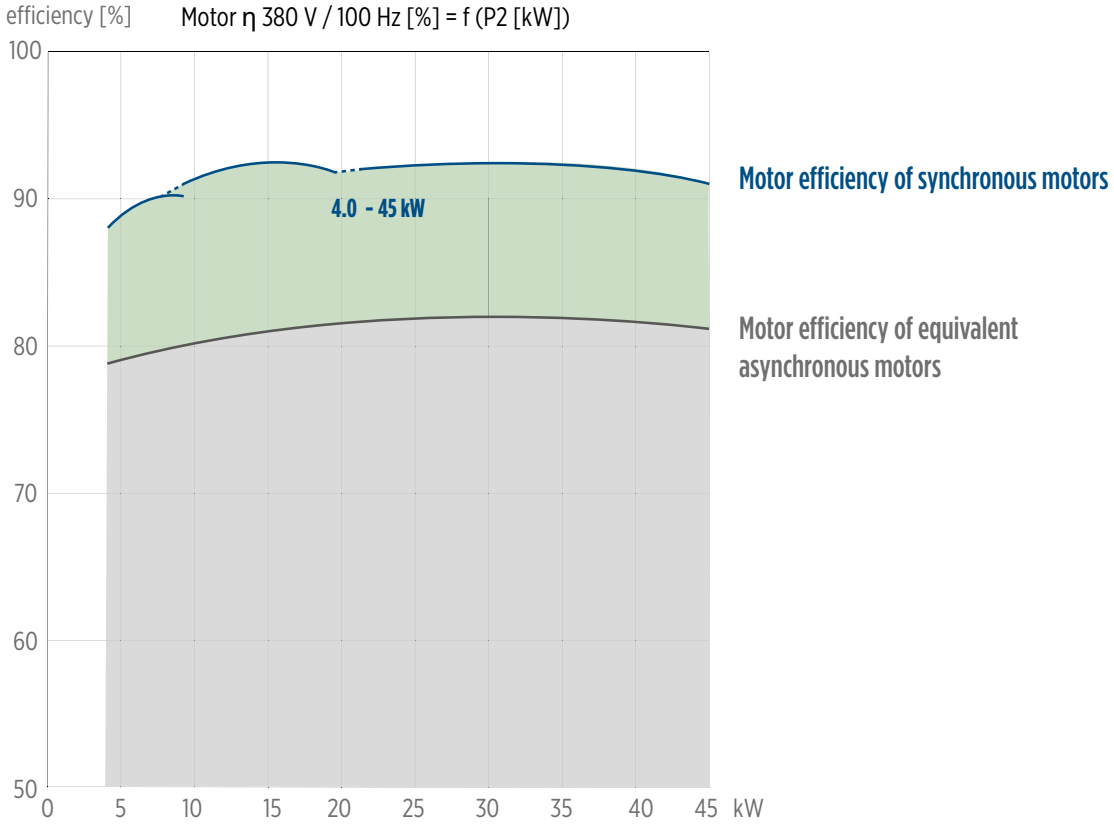

3~ MOTOR PERFORMANCE DATA 380 V / 100 HZ

motor model no.	P_N [kW]	Thrust F [N]	U_N [V]	n [min^{-1}]	I_N [A]	I_A / I_N	η [%]	cos phi	T_N [Nm]	T_A / T_N
236 080 xxxx	4	15500	380	3000	9.2	1	87.1	0.95	12.7	1
	5.5				11.0	1	89.8	0.95	17.5	1
	7.5				14.1	1	90.9	0.95	23.9	1
236 080 xxxx	9.3	15500	380	3000	17.2	1	91.2	0.95	29.6	1
	11				20.5	1	90.9	0.95	35.0	1
236 084 xxxx	13	15500	380	3000	25.3	1	91.4	0.95	41.4	1
	15				28.3	1	91.8	0.95	47.7	1
236 084 xxxx	18.5	15500	380	3000	34.1	1	92.1	0.95	58.9	1
236 084 xxxx	22	15500	380	3000	40.7	1	92.0	0.95	70.0	1
236 086 xxxx	26	27500	380	3000	51.2	1	92.3	0.95	82.8	1
	30				57.8	1	92.5	0.95	95.5	1
236 086 xxxx	37	27500	380	3000	71.3	1	92.1	0.95	117.8	1
236 086 xxxx	45	27500	380	3000	90.0	1	90.8	0.95	143.2	1

6" 3~ ENCAPSULATED PERMANENT MAGNET MOTOR

ELECTRICAL CONNECTION AND MOTOR LEADS 3~ DOL

4G4 mm²	3 x 8.4 + 1G 8.4 mm²	Electrical connection

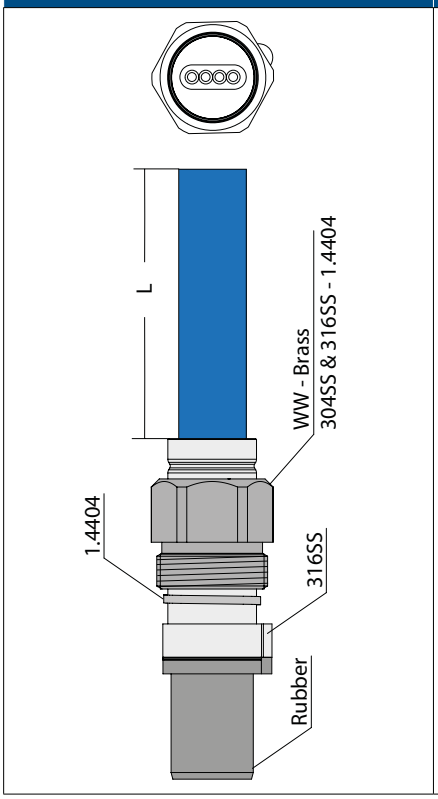

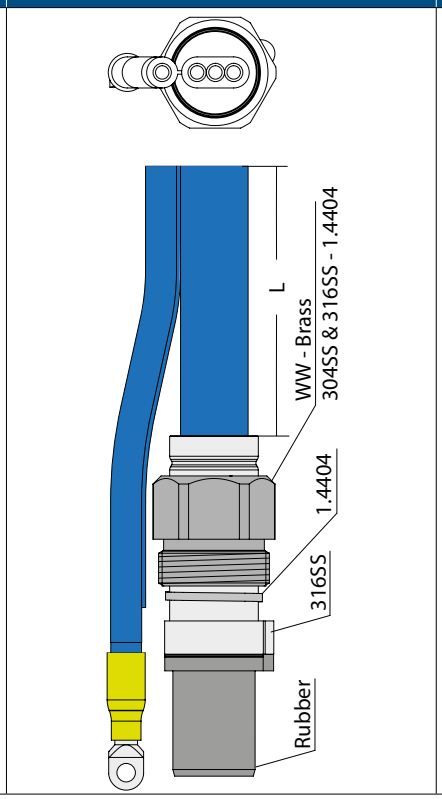

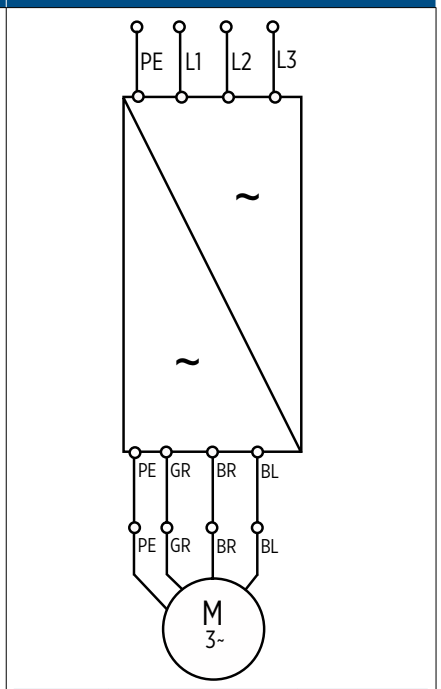

U	V	W	PE
brown	grey	black	yellow/green

Motor lead*						
4 - 22 kW						
Ø [mm²]	C [mm]	B [mm]	H [mm]	L [m]	WW	316SS
4G4	32	19	7	4	310 125 004	310 125 504

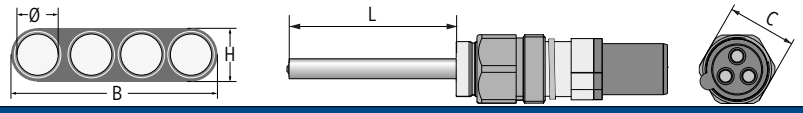

26 - 45 kW							
Ø [mm²]	C [mm]	B [mm]	B1 [mm]	B1 [mm]	H [mm]	WW	316SS
3x8.4+1G8.4	32	29.5	19.5	19.5	8.9	310 145 004	310 145 504

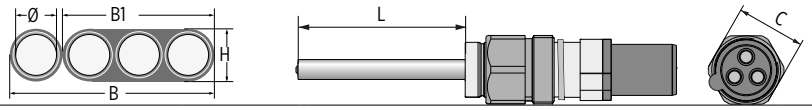

*Cables are designed for submerged operation. For air operation, please consult Franklin Electric.

WINDING RESISTANCE 380 V / 100 HZ

P_N [kW]	U_N [V]	Stator Ref.	U - V [Ohm]*	Rotor Ref.
4 - 11	380	327 245 ...	0.86	178 130 921
13 - 22	380	327 250 ...	0.33	178 130 923
26 - 45	380	327 257 ...	0.19	178 130 925

6" 3~ ENCAPSULATED PERMANENT MAGNET MOTOR

MOTOR DIMENSIONS AND MATERIALS

WW

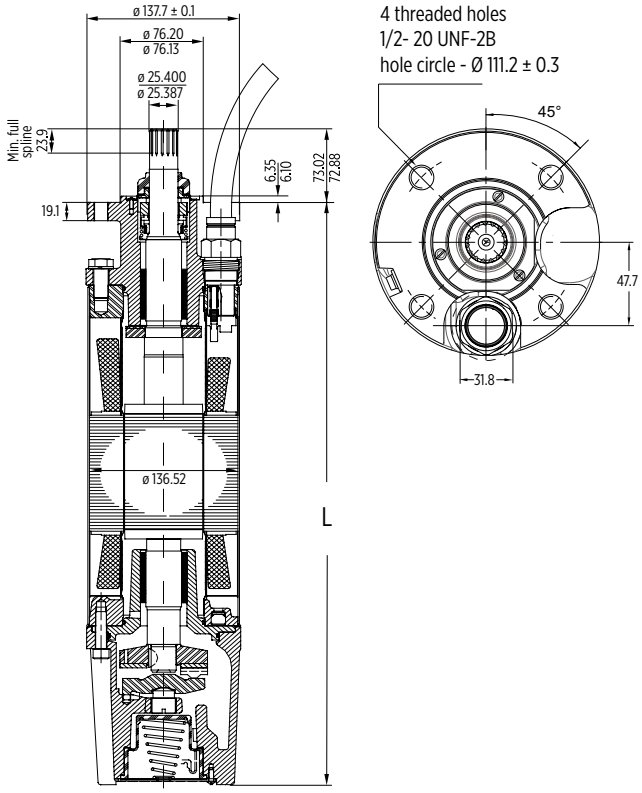

304SS & 316SS

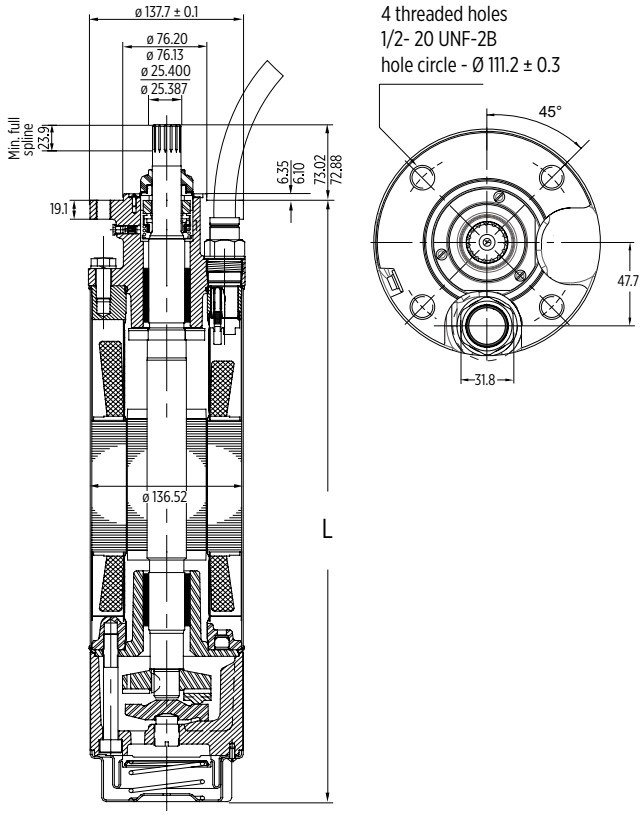

MOTOR DIMENSIONS

P_N [kW]	U_N [V]	Thrust F [N]	WW	304SS/316SSS	M [kg]	Motor with lead in single pack		Motor packing
			L [mm]	L [mm]		B x H x L [mm]	[kg]	
4 - 11	380	15.500	634,5	625,2	43,0	155 x 340 x 800	45	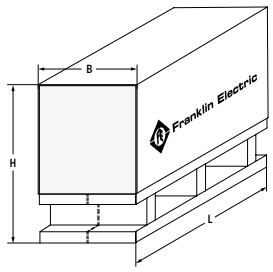
13 - 22	380	15.500	793,5	784,2	57,4	155 x 340 x 1070	61	
26 - 45	380	27.500	1020,5	1011,2	78,0	155 x 340 x 1070	84	

Tolerances according to NEMA MG 1-18.388

MOTOR MATERIAL DESCRIPTION

Part	WW	304SS	316SS
Shell	1.4301	1.4301	1.4571
Upper end bell	Cast iron powder coated	1.4301	1.4408
Thrust housing	Cast iron powder coated	1.4301	1.4408
Mechanical seal	SiC / SiC	SiC / SiC	SiC / SiC
Seal cover	1.4301	1.4301	1.4401
Slinger	EPDM	EPDM	EPDM
Shaft end*	1.4021	1.4021	1.4462
Diaphragm	EPDM	EPDM	EPDM
Lead	EPR	EPR	EPR

* running change to 1.4462 (WIP)

6" 3~ ENCAPSULATED PM MOTOR SPARE PARTS WW

MOTOR PARTS DESCRIPTION

Kit	part description	incl. positions	order no.
Kit A2 15.500N	Thrust bearing kit up to 22 kW	26	308 750 120
Kit A3 27.500N	Thrust bearing kit 26 - 45 kW	26	308 750 120
Kit B1	Seal kit	4, 17, 20, 41, 42	308 800 125
Kit C1	Slinger kit	1, 2, 3, 37	308 725 101
Kit D1	Screw kit	5, 19, 24	308 659 121
Kit E1*	Radial bearing kit up to 22 kW	12	308 678 103
Kit E2	Radial bearing kit 26 - 45 kW	12	308 678 110
PT100 Kit		44	see page 200

* Kit without rotor shaft sleeves, flange replacement bushings are unfinished

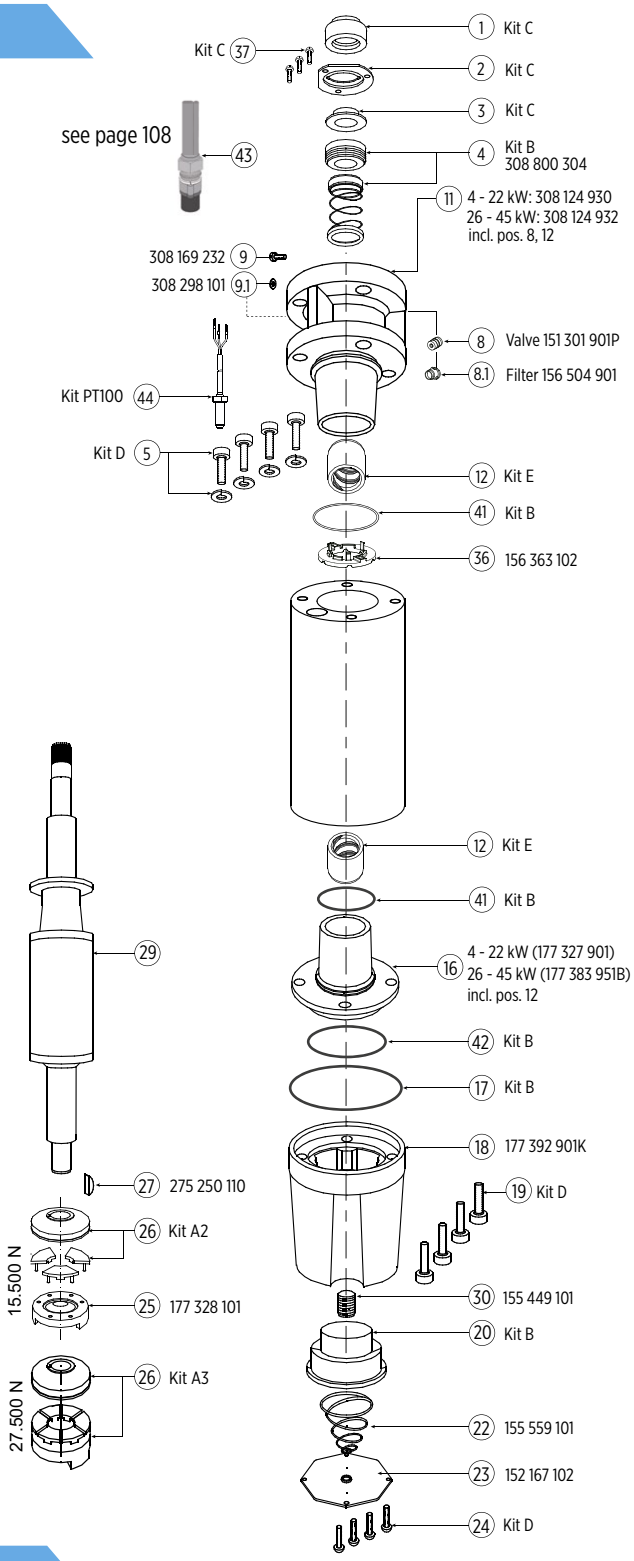

SPARE PARTS STATOR AND ROTOR WW 380 V / 100 HZ

P_N [kW]	U_N [V]	Thrust F [N]	Motor Model No.	Stator Model No.	Rotor
4 - 11	380	15.500	236 080 9561	327 245 963K	178 130 901K
13 - 22	380	15.500	236 084 9561	327 250 963K	178 130 903K
26 - 45	380	27.500	236 086 9561	327 257 963K	178 130 905K

6" 3~ ENCAPSULATED PM MOTOR SPARE PARTS 304SS / 316SS

MOTOR PARTS DESCRIPTION

Kit	part description	incl. positions	order no.
Kit A2	Thrust bearing kit 15.500 N	26	308 750 120
Kit A3	Thrust bearing kit 27.500 N	26	308 750 200
Kit B3	Seal kit	4, 17, 20, 21, 41, 44	308 800 250
Kit C3	Slinger kit	1, 2, 3, 37	308 725 150
Kit D5	Screw kit	5, 19, 24	308 659 155
Kit E1*	Radial bearing kit up to 22 kW	12	308 678 103
Kit E2	Radial bearing kit 26 - 45 kW	12	308 678 110
PT100 Kit		44	see page 200

* Kit without rotor shaft sleeves, flange replacement bushings are unfinished

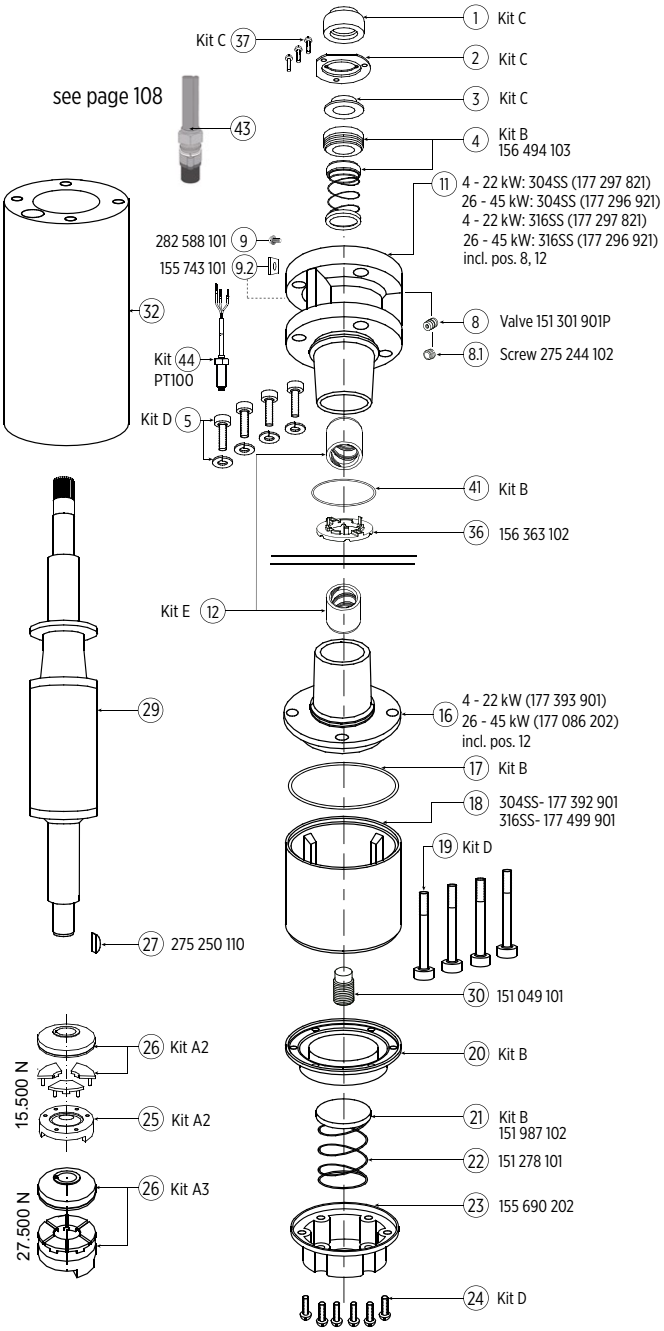

SPARE PARTS STATOR AND ROTOR 304 / 316SS 380 V / 100 HZ

P_N [kW]	U_N [V]	Thrust F [N]	Motor Model No.		Stator Model No.	Rotor
			304SS	316SS		
4 - 11	380	15.500	236 080 1461	236 080 1561	327 245 983K	178 130 921K
13 - 22	380	15.500	236 084 1461	236 084 1561	327 250 983K	178 130 923K
26 - 45	380	27.500	236 086 1461	236 086 1561	327 257 983K	178 130 925K

8" ENCAPSULATED MOTOR

High-quality encapsulated motor with hermetically-sealed windings

WATER WELL WW CI PC / 304SS | STAINLESS STEEL 316 | SAND FIGHTER

FEATURES & BENEFITS

- Double flange NEMA mounting design
- Stainless steel splined shaft
- VFD operation is possible up to a rated voltage of 400V (in compliance with the application guidelines in the motor operating instructions and the VFD manufacturer). For VFD operation with higher voltages, please consult Franklin Electric.
- StatorShield™ - Franklin encapsulation system
- Factory filled with Franklin's FES91 motor fill solution for frost protection down to -15 °C storage temperature.
- Liquid lubricated radial bearings and High capacity Kingsbury type 45 kN thrust bearing for 100 % maintenance free operation
- Field replaceable lead using Franklin's exclusive Water Bloc technology
- Pressure-equalizing diaphragm, spring pre-loaded
- SandFighter™ sealing system with SIC mechanical seal and sand slinger
- High efficiency electrical design for low operation costs
- Standard Motor: WW- Water well Design (Stator 304SS / Castings - CI Powder coated)
- Drinking water approvals

OPTIONS

- Higher-graded materials: 316SS
- Special voltages
- Retrofitable PT 100 temperature sensor

STANDARD SPECIFICATION

- Ratings: 30 - 150 kW
- Max. storage temperature - 15 °C to + 60 °C
- Nominal ambient temperature: 30 °C (with 0.16 m/s cooling flow)
- Standard Voltage:
  50 Hz: - 10 % / + 6 % U_N [(380 - 10 %) – (415 + 6 %)]
  60 Hz: ± 10 % U_N, [460 V]
- Protection IP68 and insulation class F
- Motor protection: DIN 61947-4-1
- Frequency of starts: 10 starts/ hour (with min. 3 minutes resting time), equally distributed
- DOL / YΔ - start (pos. of cables 90 °)
- Motor lead length: 8 m
- Installation orientation: Vertical / horizontal (shaft end heightened)
- Rotation counter clock wise facing shaft end (Rotation reversible)
- Integrated sensor for SubMonitor™

► SubMonitor™ Protection

MOTOR MODEL NUMBERS 50 HZ - 3-PHASEN DESIGN*

P_N [kW]	U_N [V]	Model number Digit 1 - 6		Model number Digit 7 – 10 with SubMonitor Transmitter			
		DOL	YΔ	WW**		316 SS	
				DOL	YΔ	DOL	YΔ
30	380, 400, 415	239 600	239 620	7023	8023	7223	8223
	500,525	239 670	239 720	7023	8023	-	-
37	380, 400, 415	239 601	239 621	7023	8023	7223	8223
	500,525	239 671	239 721	7023	8023	-	-
45	380, 400, 415	239 602	239 622	7023	8023	7223	8223
	500,525	239 672	239 722	7023	8023	-	-
55	380, 400, 415	239 603	239 623	7043	8043	7243	8243
	500,525	239 673	239 723	7043	8043	-	-
75	380, 400, 415	239 604	239 624	7043	8043	7243	8243
	500,525	239 674	239 724	7043	8043	-	-
93	380, 400, 415	239 105	239 125	7019	8019	7219	8219
	500,525	239 175	239 225	7019	8019	-	-
110	380, 400, 415	239 106	239 126	7519	7619	7219	8219
	500,525	239 176	239 226	7519	7619	-	-
130	380, 400, 415	239 107	239 127	7519	7619	7219	8219
	500,525	239 177	239 227	7519	7619	-	-
150	380, 400, 415	239 108	239 128	7519	7619	7219	8219
	500,525	239 178	239 228	7519	7619	-	-

* VFD operation is only allowed up to 400V supply voltage, for higher voltages please consult Franklin Electric Europa GmbH
** WW (Water well)- Stator 304SS / Castings - CI Powder coated

MOTOR MODEL NUMBERS 60 HZ - 3-PHASEN DESIGN*

P_N [kW]	$P_{max.}$ [kW]	U_N [V]	Model number Digit 1 - 6		Model number Digit 7 – 10 with SubMonitor Transmitter			
			DOL	YΔ	WW**		316 SS	
					DOL	YΔ	DOL	YΔ
30	40	230	-	239 650	-	8023	7223	8223
		380	239 660	239 680	7023	8023	7223	8223
		460	239 600	239 620	7023	8023	7223	8223
		575	239 610	-	7023	8023	7223	8223
37	50	230	-	239 651	-	8023	7223	8223
		380	239 661	239 681	7023	8023	7223	8223
		460	239 601	239 621	7023	8023	7223	8223
		575	239 611	-	7023	8023	7223	8223
45	57,8	230	-	239 652	-	8023	7223	8223
		380	239 662	239 682	7023	8023	7223	8223
		460	239 602	239 622	7023	8023	7223	8223
		575	239 612	-	7023	8023	7223	8223
55	64	230	-	239 653	-	8043	7243	8243
		380	239 663	239 683	7043	8043	7243	8243
		460	239 603	239 623	7043	8043	7243	8243
		575	239 613	-	7043	8043	7243	8243
75	86	230	-	239 654	-	8043	7243	8243
		380	239 664	239 684	7023	8043	7243	8243
		460	239 604	239 624	7023	8043	7243	8243
		575	239 614	-	7023	8043	7243	8243
93	107	380	239 165	239 185	7019	8019	7219	8219
		460	239 105	239 125	7019	8019	7219	8219
		575	239 115	-	7019	8019	7219	8219
110	128	380	239 166	239 186	7519	7619	7219	8219
		460	239 106	239 126	7519	7619	7219	8219
		575	239 116	-	7519	7619	7219	8219
130	150	380	239 167	239 187	7519	7619	7219	8219
		460	239 107	239 127	7519	7619	7219	8219
		575	239 117	-	7519	7619	7219	8219
150	170	380	239 168	239 188	7519	7619	7219	8219
		460	239 108	239 128	7519	7619	7219	8219
		575	239 118	-	7519	7619	7219	8219

* VFD operation is only allowed up to 400V supply voltage, for higher voltages please consult Franklin Electric Europa GmbH

** WW (Water well)- Stator 304SS / Castings - CI Powder coated

MOTOR PERFORMANCE DATA 50 HZ - 3-PHASEN DESIGN

P_N [kW]	Thrust F [N]	U_N [V]	n_N [min^{-1}]	I_N [A]	I_A [A]	η (Eff.) [%] at % load			cosφ (Pf.) at % load			T_N [Nm]	T_A [Nm]
						50	75	100	50	75	100		
30	45 000	380	2890	61	397	85	86	86	0,75	0,84	0,88	98	231
		400	2900	61	418	83	86	86	0,68	0,78	0,84	97	255
		415	2910	62	433	82	85	86	0,62	0,73	0,80	97	275
		500	2890	47	302	85	86	86	0,75	0,84	0,88		
		525	2900	47	318	83	86	86	0,68	0,78	0,84		
37	45 000	380	2905	75	507	85	87	87	0,78	0,85	0,89	122	266
		400	2920	74	534	84	87	87	0,71	0,81	0,86	121	295
		415	2925	74	554	83	86	87	0,66	0,76	0,83	121	317
		500	2905	57	385	85	87	87	0,78	0,85	0,89		
		525	2920	57	404	84	87	87	0,71	0,81	0,86		
45	45 000	380	2910	89	612	86	87	87	0,77	0,85	0,89	146	363
		400	2920	89	645	85	87	87	0,71	0,81	0,85	145	395
		415	2925	89	669	84	86	87	0,65	0,76	0,82	146	428
		500	2910	68	466	86	87	87	0,77	0,85	0,89		
		525	2920	68	494	85	87	87	0,71	0,81	0,85		
55	45 000	380	2910	111	819	86	88	88	0,79	0,86	0,89	182	507
		400	2920	108	862	85	87	88	0,72	0,82	0,87	182	563
		415	2925	108	895	84	87	88	0,67	0,78	0,84	182	605
		500	2910	85	623	86	88	88	0,79	0,86	0,89		
		525	2920	83	661	85	87	88	0,72	0,82	0,87		
75	45 000	380	2920	153	1208	86	87	87	0,71	0,81	0,86	243	637
		400	2930	153	1272	85	87	87	0,63	0,75	0,81	242	706
		415	2935	156	1319	84	87	87	0,57	0,70	0,77	242	760
		500	2920	113	835	86	88	88	0,79	0,86	0,89		
		525	2925	111	861	85	87	87	0,72	0,82	0,87		
93	45 000	380	2920	194	1265	85	87	87	0,75	0,83	0,86	303	511
		400	2930	190	1332	84	86	87	0,68	0,78	0,83	302	567
		415	2935	191	1382	83	86	87	0,63	0,74	0,80	302	610
		500	2920	148	961	85	87	87	0,75	0,83	0,86		
		525	2930	145	1015	84	86	87	0,68	0,78	0,83		
110	45 000	380	2920	226	1517	86	88	88	0,77	0,84	0,87	364	694
		400	2930	222	1597	85	87	88	0,70	0,80	0,84	363	769
		415	2935	223	1657	84	87	88	0,64	0,75	0,81	363	828
		500	2920	172	1153	86	88	88	0,77	0,84	0,87		
		525	2930	170	1217	85	87	88	0,70	0,80	0,84		
130	45 000	380	2910	260	1651	86	87	87	0,83	0,87	0,89	425	837
		400	2920	252	1738	86	87	88	0,79	0,84	0,87	424	927
		415	2930	247	1803	85	87	88	0,74	0,81	0,86	423	1153
		500	2910	198	1255	86	87	87	0,83	0,87	0,89		
		525	2920	192	1324	86	87	88	0,79	0,84	0,87		
150	45 000	380	2910	294	1765	86	88	88	0,83	0,88	0,90	487	933
		400	2920	284	1858	86	88	88	0,79	0,86	0,88	485	1034
		415	2930	277	1928	86	88	88	0,75	0,83	0,87	485	1113
		500	2910	224	1341	86	88	88	0,83	0,88	0,90		
		525	2920	217	1416	86	88	88	0,79	0,86	0,88		

MOTOR PERFORMANCE DATA 60 HZ - 3-PHASEN DESIGN

P_N [kW]	$P_{max.}$ [kW]	Thrust F [N]	U_N [V]	HZ	n_N [min^{-1}]	$I_{max.}$ [A]	I_A [A]	η_{max} [%] **at % load**	LINE TO LINE RESISTANCE [Ω]
30	**40**	45000	380	60	3525	72	479	86	.16-.20
			460	60	3525	60	396	86	.24-.30
			575	60	3525	48	317	86	.39-.49
37	**50**	45000	380	60	3525	88	656	87	.12-.16
			460	60	3525	73	542	87	.18-.22
			575	60	3525	59	434	87	.28-.34
45	**57,8**	45000	380	60	3525	104	797	87	.09-.11
			460	60	3515	86	658	88	.14-.17
			575	60	3525	69	526	87	.22-.28
55	**64**	45000	380	60	3525	130	1046	88	.06-.09
			460	60	3515	107	864	88	.10-.13
			575	60	3525	86	691	88	.16-.21
75	**86**	45000	380	60	3525	172	1466	89	.05-.06
			460	60	3520	142	1211	87	.07-.09
			575	60	3525	114	969	89	.11-.13
93	**107**	45000	380	60	3525	228	1596	86	.03-.04
			460	60	3520	188	1318	84	.05-.07
			575	60	3525	151	1054	86	.08-.11
110	**128**	45000	380	60	3525	266	1961	87	.02-.03
			460	60	3520	219	1620	86	.04-.05
			575	60	3525	176	1296	87	.06-.08
130	**150**	45000	380	60	3525	302	1991	88	.02-.04
			460	60	3515	249	1645	88	.04-.05
			575	60	3525	200	1316	88	.06-.08
150	**170**	45000	380	60	3525	342	2270	88	.02-.03
			460	60	3510	282	1875	89	.03-.05
			575	60	3525	226	1500	88	.05-.07

ELECTRICAL CONNECTION - 3-PHASE DESIGN

DOL

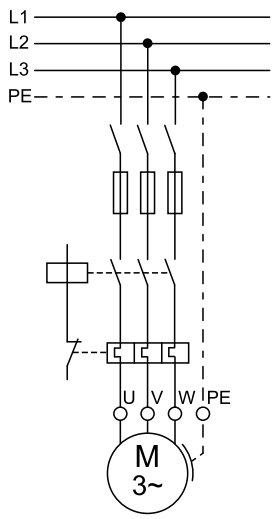

YΔ

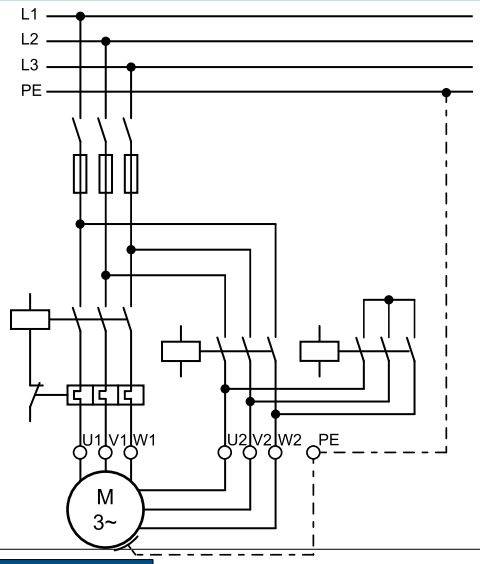

U	V	W	PE
black	grey	brown	yellow/green

WINDING RESISTANCE DATA 50 HZ - 3-PHASE DESIGN

		3 ~ DOL		3 ~ YΔ	
P_N [kW]	U_N [V]	Stator Ref.	U - V / Ohm V - W / Ohm U - W / Ohm	Stator Ref.	U_1 - U_2 / Ohm V_1 - V_2 / Ohm W_1 - W_2 / Ohm
30	220	-	**-**	338 382 ...	**0.123 - 0.150**
	380, 400, 415	338 382 ...	**0.247 - 0.302**	338 443 ...	**0.345 - 0.423**
	500, 525	338 610 ...	**0.399 - 0.487**	338 610 ...	**0.621 - 0.759**
37	220	-	**-**	338 383 ...	**0.090 - 0.111**
	380, 400, 415	338 383 ...	**0.181 - 0.221**	338 588 ...	**0.272 - 0.332**
	500, 525	338 611 ...	**0.280 - 0.342**	338 611 ...	**0.464 - 0.566**
45	220	-	**-**	338 384 ...	**0.071 - 0.087**
	380, 400, 415	338 384 ...	**0.142 - 0.174**	338 645 ...	**0.210 - 0.257**
	500, 525	338 612 ...	**0.227 - 0.277**	338 612 ...	**0.369 - 0.450**
55	220	-	**-**	338 385 ...	**0.053 - 0.065**
	380, 400, 415	338 385 ...	**0.105 - 0.128**	338 646 ...	**0.164 - 0.200**
	500, 525	338 613 ...	**0.169 - 0.207**	338 613 ...	**0.267 - 0.327**
75	220	-	**-**	338 386 ...	**0.036 - 0.045**
	380, 400, 415	338 386 ...	**0.073 - 0.089**	338 591 ...	**0.102 - 0.125**
	500, 525	338 614 ...	**0.129 - 0.158**	338 614 ...	**0.198 - 0.243**
93	380,400,415	336 053 ...	**0.055 - 0.067**	336 053 ...	**0.083 - 0.101**
	500, 525	338 514 ...	**0.091 - 0.112**	338 514 ...	**0.137 - 0.168**
110	380,400,415	336 054 ...	**0.046 - 0.056**	336 054 ...	**0.069 - 0.084**
	500, 525	338 515 ...	**0.086 - 0.106**	338 515 ...	**0.129 - 0.159**
130	380,400,415	336 524 ...	**0.042 - 0.052**	336 524 ...	**0.063 - 0.078**
	500, 525	338 516 ...	**0.073 - 0.090**	338 516 ...	**0.110 - 0.135**
150	380,400,415	336 055 ...	**0.036 - 0.044**	336 055 ...	**0.054 - 0.066**
	500, 525	337 071 ...	**0.057 - 0.070**	337 071 ...	**0.086 - 0.105**

VDE / KTW Approved Leads* WW / 316SS

3 ~ DOL start

	P_N [kW]	Ø [mm²]	Size [mm]	Type	Qty.	L (m)	Part numbers WW	Part numbers 316SS
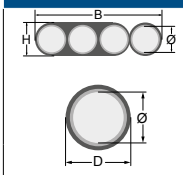	**30 - 45**	3X8,4 + 1G8,4 mm²	B 29,5 / H 8,9	VDE/KTW	1	8	305 312 901	305 312 911
	55 - 93	3 x (1X16 mm²)	D 11,6 (±0,2)	VDE/KTW	1	8	305 310 901	305 310 951
	110 –150*	3 x (1X35 mm²)	Ø 14,5 (±0,3)	VDE/KTW	1	8	305 309 901	

* 3 Leads with single conductors

3 ~ YΔ Start (Pos. of cables 90°

	P_N [kW]	Ø [mm²]	Size [mm]	Type	Qty.	L (m)	Part numbers WW	Part numbers 316SS
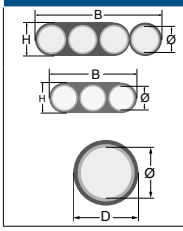	**30 - 45**	3X8,4 + 1G8,4 mm²	B 29,5 / H 8,9	VDE/KTW	1	8	305 312 902	305 312 912
		1x 3X8,4 mm²	B 19,6 / H 8,9		1			
	55 - 150	3 x (1X16 mm²)	D 11,6 (±0,2)	VDE/KTW	2	8	305 310 901	305 310 951

Ground Leads

	P_N [kW]	Ø	Size [mm]	Type	Qty.	L (m)	Part numbers WW/316SS
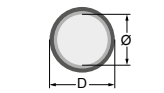	**55 - 150**	1G25 mm²	D 13 mm (±0,3)	VDE/KTW	1	8	308 053 080

* Cables are designed for submerged operation. For air operation please consult Franklin Electric.

8" Encapsulated Standard Motor WW Design

30 - 45 kW Type 2.1***

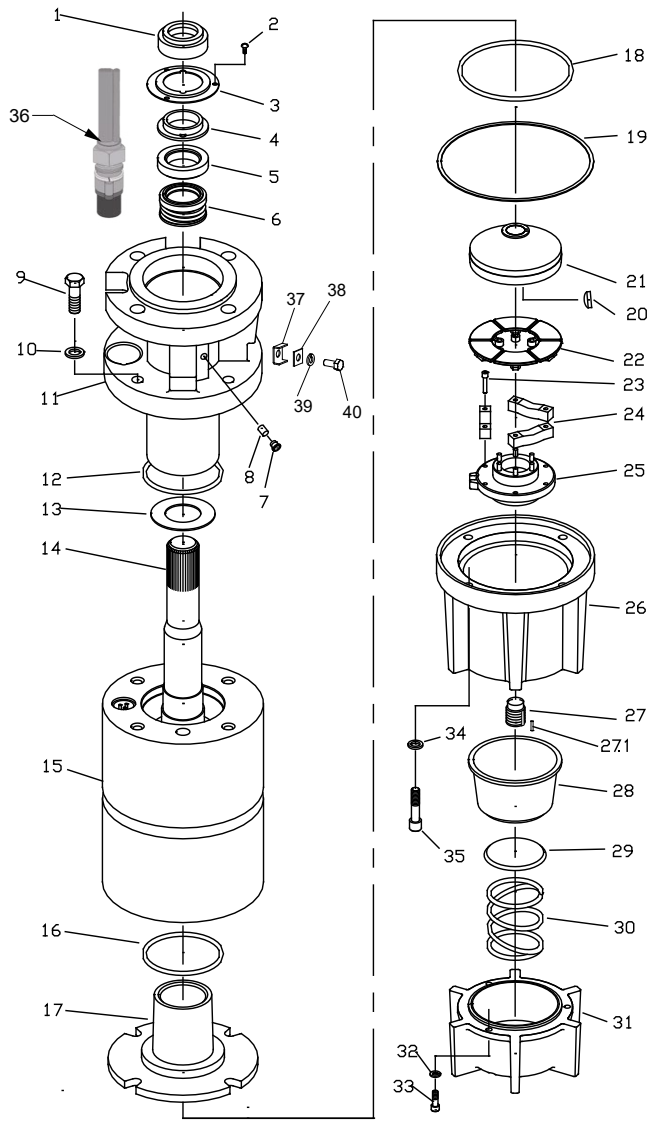

Position	Part Description	Qty	Kit
1	Rubber Slinger	1	B
2	Bushing Cover Screw	3	B, F
3	Bushing Cover	1	B
4	Slinger Bushing	1	B
5, 6	Shaft Seal	1	B
7	Filter Assembly	1	B
8	Valve Assembly	1	B
9, 10	Screw/Lockwasher	4	C, D, F
11	End Bell, Upper w/Radial Brg	1	C, D
12	O-Ring	1	B, C, D
13	Upthrust Washer	1	A
14	Rotor	1	see page 120/121
15	Stator	1	see page 120/121
16	O-Ring	1	B, E
17	End Bell, Lower w/Radial Brg	1	E
18	O-Ring	1	B, E
19	Gasket	1	B
20	Woodruff Key	1	A
21	Thrust Disc Asm	1	A
22, 23, 24, 25	Thrust Segment Asm	1	A
26	Thrust Housing	1	G
27	Adjusting Screw	1	A
27.1	Pin (Brass)	1	A
28	Diaphragm	1	B
29	Spring Plate	1	B
30	Diaphragm Spring	1	B
31	Diaphragm Cover	1	H
32, 33	Screw/Lockwasher	3	F, H
34, 35	Screw/Lockwasher	4	F, G
36	Lead	1/2	see page 117
37	U - Clip	1	152 283 101
38	Washer	1	275 609 101
39	Lockwasher	1	275 606 110
40	Ground screw	1	276 015 102

	Description	Includes Pos.	Part Number
Kit A 40 - 60 HP	Thrust Bearing	13, 19 - 25, 27, 27.1	305 428 001
Kit B1 40 - 60 HP	Seal SiC	1 - 8, 12, 16, 18, 19, 28 - 30	305 428 011
Kit C1 40 - 60 HP 3 Lead	End Bell, Upper	9 - 12	305 428 003
Kit D1 40 - 60 HP 6 Lead	End Bell, Upper	9 - 12	305 428 005
Kit E 40 - 60 HP	End Bell, Lower*	16 - 18	305 428 007
Kit F 40 - 60 HP	Fasteners*	2, 9, 10, 32 - 35	305 428 017
Kit G 40 - 60 HP	Thrust Housing	26, 34, 35	305 428 009
Kit H 40 - 60 HP	Diaphragm Cover	31 - 33	305 428 010
Kit I Type 2.1 Motors	Radial Bearing**	SS Sleeve & Carbon Bushing	305 428 054

* Suitable for WW and 316SS Motors
** Parts are Semi finished
*** Spare parts for motors build up to june 2015 please contact FE

8" Encapsulated Standard Motor WW Design

55 - 150 kW Type 1

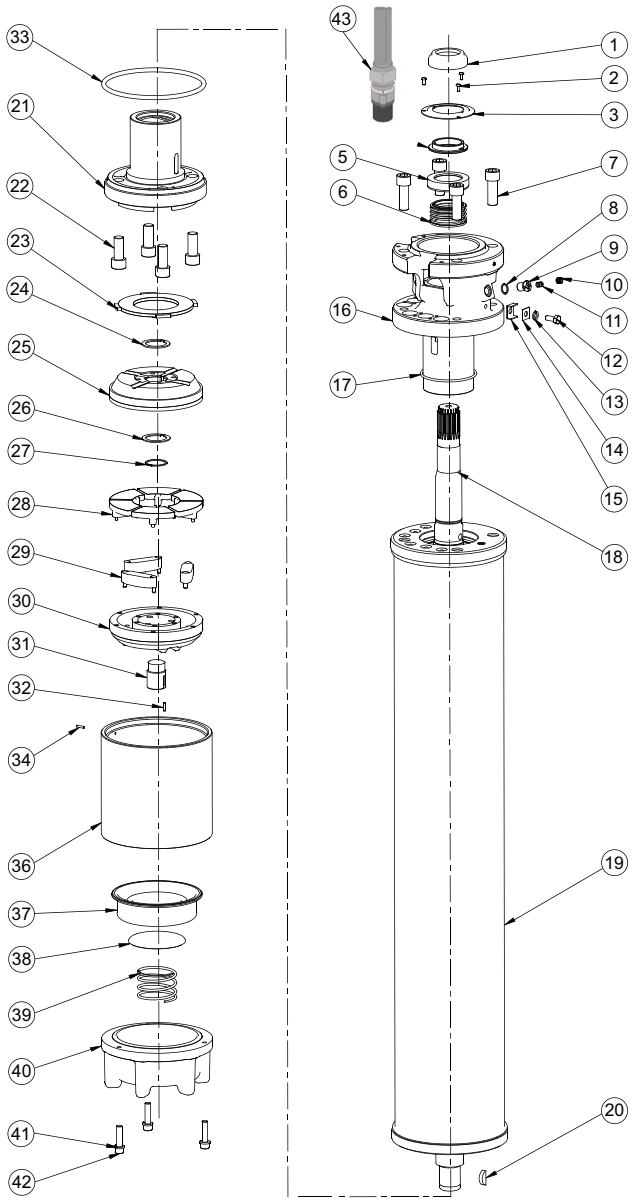

Position	Part Description	Qty	Kit
1	Rubber Slinger	1	B
2	Bushing Cover Screw	3	B, F
3	Bushing Cover	1	B
4	Slinger Bushing	1	B
5, 6	Shaft Seal	1	B
7	Screw/Lockwasher	4	C, D, F
8, 9, 11	Valve Assembly	1	B, C, D
10	Filter Assembly	1	B
12, 13, 14, 15	Ground Lug Asm	1	C, D
16	End Bell, Upper w/Radial Brg	1	C, D
17	O-Ring	1	B, C, D
18	Rotor	1	see page 120/121
19	Stator	1	see page 120/121
20	Woodruff Key	1	A
21	End Bell, Lower w/Radial Brg	1	E
22	Screw	4	E, F
23	Upthrust Washer	1	A 155 318 201K
24, 26, 27	Shim/Retainer Ring	1	A
25	Thrust Disc Asm	1	A
28, 29, 30	Thrust Segment Asm	1	A
31	Adjusting Screw	1	A
32	Pin	1	A
33	O-Ring	1	A, E
34	Pin (Brass) Ø5 x 14mm	1	G
36	Thrust Housing	1	G
35	Plug	1	--
37	Diaphragm	1	B
38	Spring Plate	1	B
39	Diaphragm Spring	1	B
40	Diaphragm Cover	1	H
41, 42	Screw/Lockwasher	3	F, H
43	Lead	3 / 6	see page 117

	Description	Includes Pos.	Part Number
Kit A 75 - 200 HP	Thrust Bearing	20, 23 - 33	305 428 020
Kit B1 75 - 200 HP	Seal Kit	1 – 6, 10, 11, 17, 32, 33, 37 - 39	305 428 021
Kit B2 75 - 200 HP	Seal SiC ***	1 – 6, 10, 11, 17, 32, 33, 37 - 39	305 428 022
Kit C1 75 HP 3 Lead	End Bell, Upper	7, 11 - 17	305 428 023
Kit C2 150 - 200 HP 3 Lead	End Bell, Upper	7, 11 - 17	305 428 024
Kit D 75 - 200 HP 6 Lead	End Bell, Upper	7, 11 - 17	305 428 025
Kit E 75 - 200 HP	End Bell, Lower*	21, 22, 32, 33	305 428 037
Kit F 75 – 200 HP	Fasteners*	2, 7, 22, 41, 42	305 428 039
Kit G 75 - 200 HP	Thrust Housing	34, 36	305 428 029
Kit H 75 - 200 HP	Diaphragm Cover	40 - 42	305 428 030
Kit I Type 1 Motors	Radial Bearing**	SS Sleeve & Carbon Bushing	305 428 055

* Suitable for WW and 316SS Motors
** Parts are Semi finished
*** Spring DM 62,7mm for 125 - 200 HP only

Replacement Stators and Rotors WW / 50 Hz

3 ~ Direct start with SubMonitor Transmitter

P_N [kW]	U_N [V]	Motor Model No.	Stator	Rotor
30	380, 400, 415	239 600 7023	305 500 901	575 122 925
	500, 525	239 670 7023	338 610 902	
37	380, 400, 415	239 601 7023	305 501 901	575 122 930
	500, 525	239 671 7023	338 611 903	
45	380, 400, 415	239 602 7023	305 502 901	575 122 931
	500, 525	239 672 7023	338 612 904	
55	380, 400, 415	239 603 7043	338 386 915	575 122 920
	500, 525	239 673 7043	338 613 902	
75	380, 400, 415	239 604 7043	338 386 915	575 122 921
	500, 525	239 674 7043	338 614 907	
93	380, 400, 415	239 105 7019	305 505 901	575 122 922
	500, 525	239 175 7019	338 514 951	
110	380, 400, 415	239 106 7519	305 506 902	575 122 923
	500, 525	239 176 7519	338 515 951	
130	380, 400, 415	239 107 7519	336 524 101	575 122 924
	500, 525	239 177 7519	*	
150	380, 400, 415	239 108 7519	336 055 905	575 122 918
	500, 525	239 178 7519	337 071 912	

Replacement Stators and Rotors WW / 50 Hz

3 ~ YΔ Start with SubMonitor Transmitter (Pos. of cabels 90°)

P_N [kW]	U_N [V]	Motor Model No.	Stator	Rotor
30	220	239 400 8023	338 382 911	575 122 925
	380, 400, 415	239 620 8023	305 500 503	
	500, 525	239 720 8023	338 610 904	
37	220	239 401 8023	305 501 903	575 122 930
	380, 400, 415	239 621 8023	305 501 904	
	500, 525	239 721 8023	338 611 906	
45	220	239 402 8023	305 502 902	575 122 931
	380, 400, 415	239 622 8023	305 502 905	
	500, 525	239 722 8023	338 612 906	
55	220	239 403 8043	305 503 904	575 122 920
	380, 400, 415	239 623 8043	305 503 909	
	500, 525	239 723 8043	338 613 906	
75	220	239 404 8043	338 386 904	575 122 921
	380, 400, 415	239 624 8043	305 504 904	
	500, 525	239 724 8043	305 504 908	
93	380, 400, 415	239 125 8019	305 505 903	575 122 922
	500, 525	239 225 8019	305 505 910	
110	380, 400, 415	239 126 7619	305 506 903	575 122 923
	500, 525	239 226 7619	338 515 952	
130	380, 400, 415	239 127 7619	336 524 917	575 122 924
	500, 525	239 227 7619	338 516 902	
150	380, 400, 415	239 128 7619	336 055 919	575 122 918
	500, 525	239 228 7619	337 071 914	

Replacement Stators and Rotors - 3~ DOL 60 HZ - WW MOTORS

P_N [kW]	$P_{max.}$ [kW]	U_N [V]	Stator*	Rotor
30	40	230		575 122 925
		380		
		460		
		575		
37	50	230		575 122 930
		380		
		460		
		575		
45	57,8	230		575 122 931
		380		
		460		
		575		
55	64	230		575 122 932
		380		
		460		
		575		
75	86	230		575 122 917
		380		
		460		
		575		
93	107	380		575 122 922
		460		
		575		
110	128	380		575 122 923
		460		
		575		
130	150	380		575 122 924
		460		
		575		
150	170	380		575 122 918
		460		

* Spare parts stators 60 Hz on request

8" Encapsulated 316SS

30 - 45 kW Type 2.1***

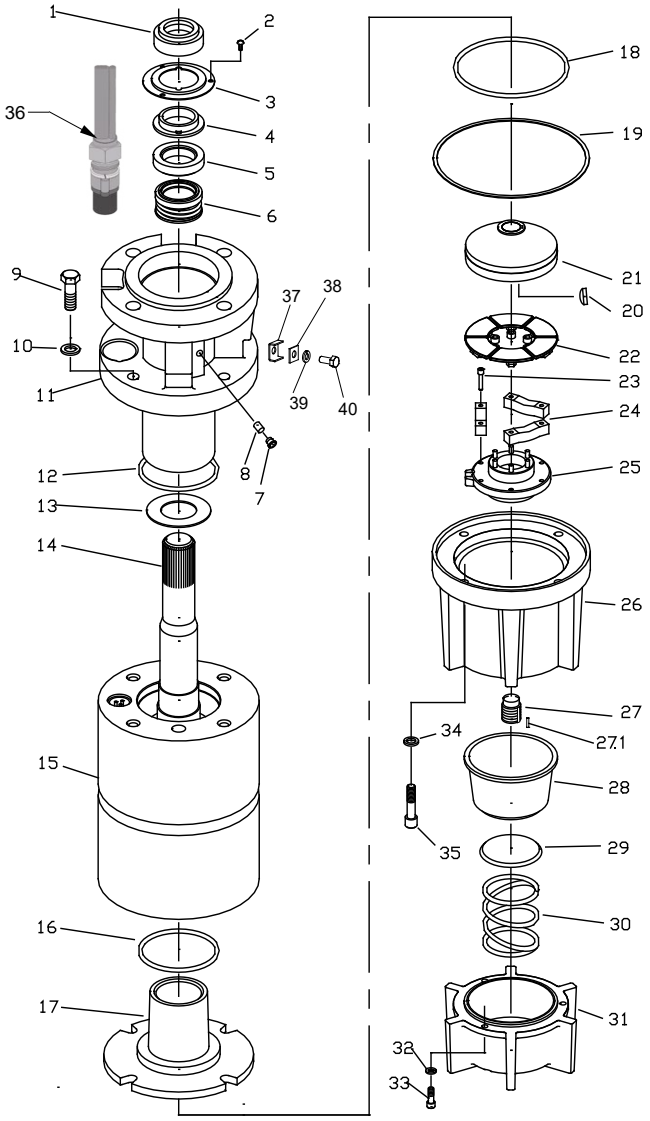

Position	Part Description	Qty	Kit
1	Rubber Slinger	1	B
2	Bushing Cover Screw	3	B, F
3	Bushing Cover	1	B
4	Slinger Bushing	1	B
5, 6	Shaft Seal	1	B
7	Filter Assembly	1	B
8	Valve Assembly	1	B
9, 10	Screw/Lockwasher	4	C, D, F
11	End Bell, Upper w/Radial Brg	1	C, D
12	O-Ring	1	B, C, D
13	Upthrust Washer	1	A, B1 155 941 101
14	Rotor	1	see page 124/125
15	Stator	1	see page 124/125
16	O-Ring	1	B, E
17	End Bell, Lower w/Radial Brg	1	E
18	O-Ring	1	B, E
19	Gasket	1	B
20	Woodruff Key	1	A
21	Thrust Disc Asm	1	A
22, 23, 24, 25	Thrust Segment Asm	1	A
26	Thrust Housing	1	G
27	Adjusting Screw	1	A
27.1	Pin (Brass)	1	A
28	Diaphragm	1	B
29	Spring Plate	1	B
30	Diaphragm Spring	1	B
31	Diaphragm Cover	1	H
32, 33	Screw/Lockwasher	3	F, H
34, 35	Screw/Lockwasher	4	F, G
36	Lead	1/2	see page 117
37	U - Clip	1	152 283 101
38	Washer	1	275 609 101
39	Lockwasher	1	275 606 110
40	Ground screw	1	276 015 102

	Description	Includes Pos.	Part Number
Kit A 40 - 60 HP	Thrust Bearing*	13, 19 - 25, 27, 27.1	305 428 001
Kit B 40 - 60 HP	Seal Kit	1 - 8, 12, 16, 18, 19, 28 - 30	305 428 012
Kit C1 40 - 60 HP 3 Lead	End Bell, Upper	9 - 12	305 428 013
Kit D1 40 - 60 HP 6 Lead	End Bell, Upper	9 - 12	305 428 015
Kit E 40 - 60 HP	End Bell, Lower*	16 - 18	305 428 007
Kit F 40 - 60 HP	Fasteners*	2, 9, 10, 32 - 35	305 428 017
Kit G 40 - 60 HP	Thrust Housing	26, 34, 35	305 428 018
Kit H 40 - 60 HP	Diaphragm Cover	31 - 33	305 428 019
Kit I Type 2.1 Motors	Radial Bearing**	SS Sleeve & Carbon Bushing	305 428 054

* Suitable for WW and 316SS Motors
** Parts are Semi finished
*** Spare parts for motors build up to june 2015 please contact FE

8" Encapsulated 316SS

55 - 150 kW Type 1

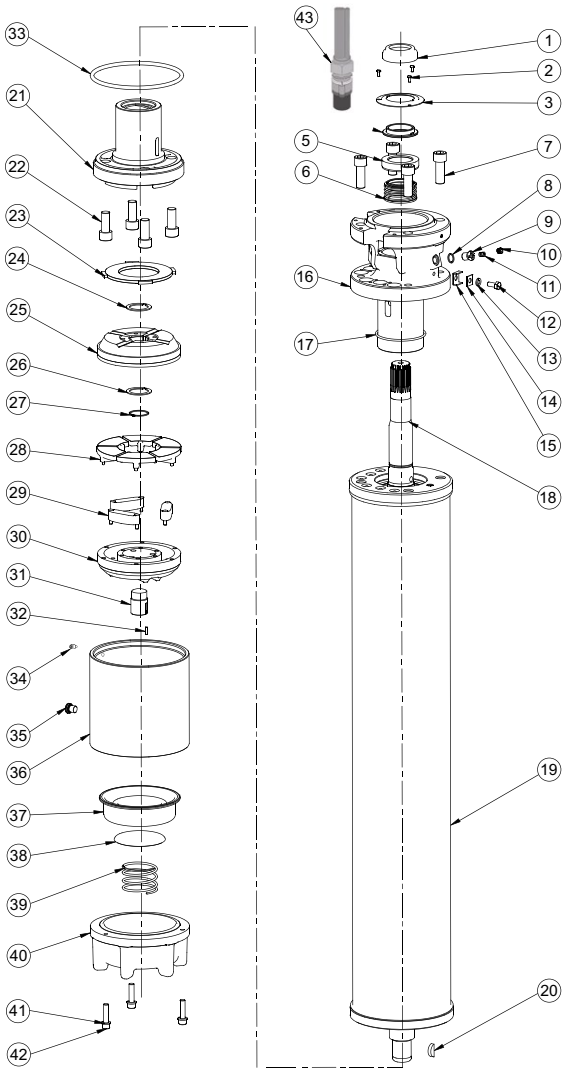

Position	Part Description	Qty	Kit
1	Rubber Slinger	1	B
2	Bushing Cover Screw	3	B, F
3	Bushing Cover	1	B
4	Slinger Bushing	1	B
5, 6	Shaft Seal	1	B
7	Screw/Lockwasher	4	C, D, F
8, 9, 11	Valve Assembly	1	B, C, D
10	Filter Assembly	1	B
12, 13, 14, 15	Ground Lug Asm	1	C, D
16	End Bell, Upper w/Radial Brg	1	C, D
17	O-Ring	1	B, C, D
18	Rotor	1	see page 124/125
19	Stator	1	see page 124/125
20	Woodruff Key	1	A
21	End Bell, Lower w/Radial Brg	1	E
22	Screw	4	E, F
23	Upthrust Washer	1	A
24, 26, 27	Shim/Retainer Ring	1	A
25	Thrust Disc Asm	1	A
28, 29, 30	Thrust Segment Asm	1	A
31	Adjusting Screw	1	A
32	Pin	1	A
33	O-Ring	1	A, E
34	Pos.- Screw	1	282 560 101 / G
35	Screw Plug (only 316ss Motor)	1	156 409 101
36	Thrust Housing	1	G
37	Diaphragm	1	B
38	Spring Plate	1	B
39	Diaphragm Spring	1	B
40	Diaphragm Cover	1	H
41, 42	Screw/Lockwasher	3	F, H
43	Lead	3 / 6	see page 117

	Description	Includes Pos.	Part Number
Kit A 75 - 200 HP	Thrust Bearing	20, 23 - 33	305 428 020
Kit B 75 – 200 HP	Seal SiC***	1 – 6, 10, 11, 17, 32, 33, 37 - 39	305 428 033
Kit C1 75 HP 3 Lead	End Bell, Upper	7, 11 - 17	305 428 034
Kit C2 150 - 200 HP 3 Lead	End Bell, Upper	7, 11 - 17	305 428 035
Kit D 75 - 200 HP 6 Lead	End Bell, Upper	7, 11 - 17	305 428 036
Kit E 75 - 200 HP	End Bell, Lower*	21, 22, 32, 33	305 428 037
Kit F 75 - 200 HP	Fasteners*	2, 7, 22, 41, 42	305 428 039
Kit G 75 - 200 HP	Thrust Housing	34, 35, 36	305 428 040
Kit H 75 - 200 HP	Diaphragm Cover	40 - 42	305 428 041
Kit I Type 1 Motors	Radial Bearing**	SS Sleeve & Carbon Bushing	305 428 055

* Suitable for WW and 316SS Motors
** Parts are Semi finished
*** Spring DM 62,7mm for 125 - 200 HP only

Replacement Stators and Rotors 316SS/ 50 Hz

3 ~ Direct start with SubMonitor Transmitter

P_N [kW]	U_N [V]	Motor Model No.	Stator	Rotor
30	380, 400, 415	239 600 7223	305 500 902	575 122 925
37	380, 400, 415	239 601 7223	305 501 902	575 122 930
45	380, 400, 415	239 602 7223	305 502 903	575 122 931
55	380, 400, 415	239 603 7243	338 385 915	575 122 920
75	380, 400, 415	239 604 7243	338 386 915	575 122 921
93	380, 400, 415	239 105 7219	305 505 902	575 122 922
110	380, 400, 415	239 106 7219	305 506 906	575 122 923
130	380, 400, 415	239 107 7219	336 524 915	575 122 924
150	380, 400, 415	239 108 7219	336 055 916	575 122 918

3 ~ YΔ Start with SubMonitor Transmitter (Pos. of cabels 90°)

P_N [kW]	U_N [V]	Motor Model No.	Stator	Rotor
30	380, 400, 415	239 620 8223	338 443 904	575 122 925
37	380, 400, 415	239 621 8223	338 588 904	575 122 930
45	380, 400, 415	239 622 8223	305 502 906	575 122 931
55	380, 400, 415	239 623 8223	305 503 910	575 122 920
75	380, 400, 415	239 624 8223	305 504 905	575 122 921
93	380, 400, 415	239 125 8219	305 505 904	575 122 922
110	380, 400, 415	239 126 8219	305 506 905	575 122 923
130	380, 400, 415	239 127 8219	336 524 918	575 122 924
150	380, 400, 415	239 128 8219	305 508 904	575 122 918

Replacement Stators and Rotors - 3~ DOL 60 HZ - WW MOTORS

P_N [kW]	$P_{max.}$ [kW]	U_N [V]	Stator*	Rotor
30	40	230		575 122 925
		380		
		460		
		575		
37	50	230		575 122 930
		380		
		460		
		575		
45	57,8	230		575 122 931
		380		
		460		
		575		
55	64	230		575 122 932
		380		
		460		
		575		
75	86	230		575 122 917
		380		
		460		
		575		
93	107	380		575 122 922
		460		
		575		
110	128	380		575 122 923
		460		
		575		
130	150	380		575 122 924
		460		
		575		
150	170	380		575 122 918
		460		
		575		

* Spare parts stators 60 Hz on request

8" Outline Drawings WW / 316 SS

30 - 45 kW

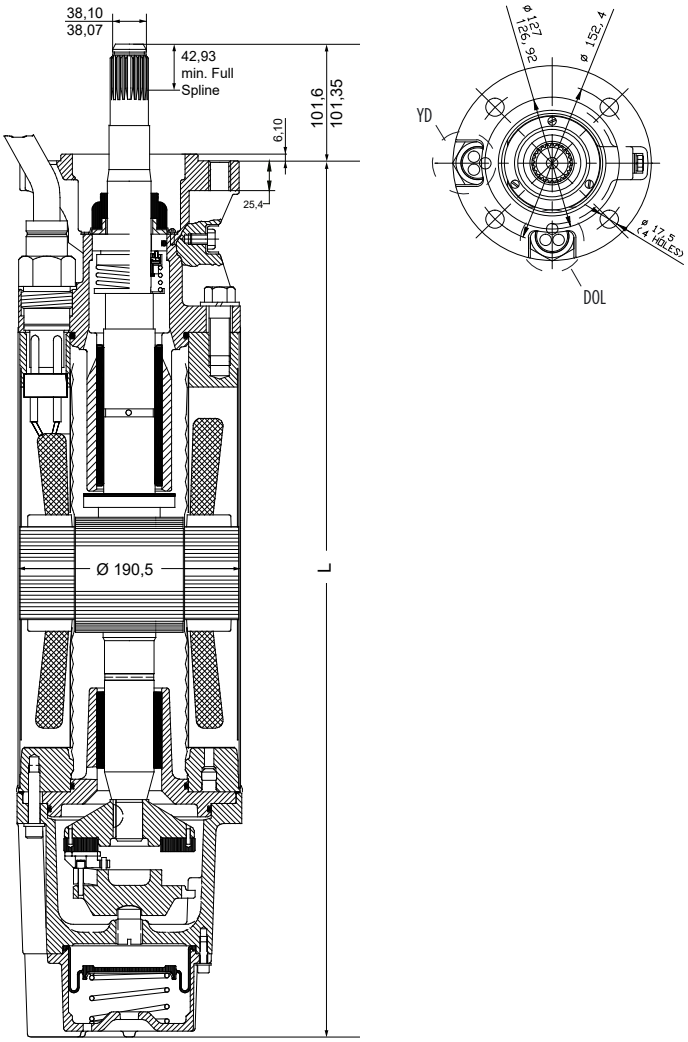

55 - 150 kW

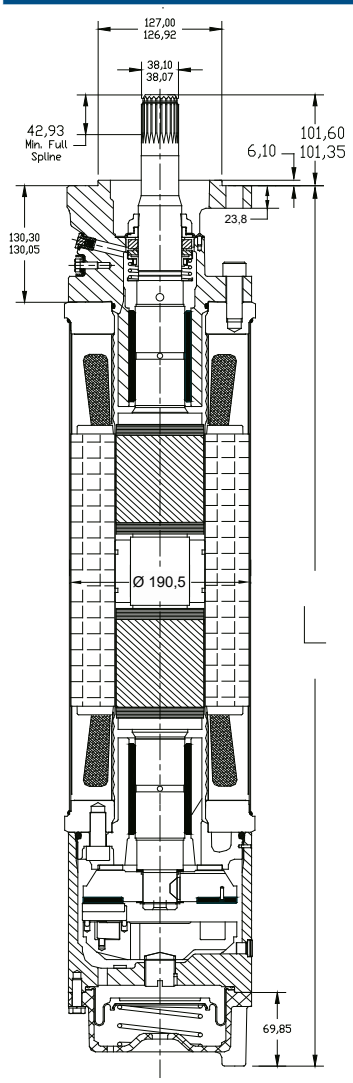

DOL 55 - 93kW

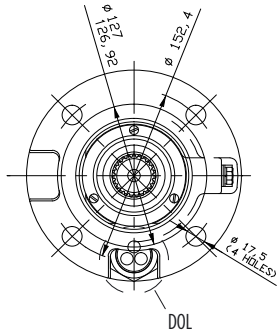

DOL 110 - 150kW

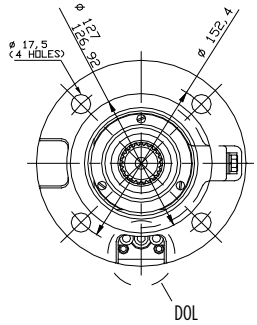

YΔ 55 - 150kW

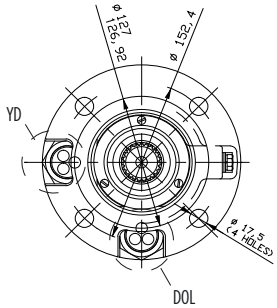

Material DIN / AISI

Parts	WW	316 SS
Shell	1.4301	1.4571
Upper end bell	Cast iron powder coated	1.4408
Lower end bell	Cast iron 20	1.4401
Thrust housing	Cast iron powder coated	1.4408
Mechanical seal	SiC	SiC
Seal cover	1.4301	1.4401
Slinger	BUNA N	Hydrin 100
Shaft end	1.4305	1.4542
Diaphragm	BUNA N	Hydrin
Cable	EPR	EPR
Cap screw (cable)	Brass	1.4401
Lead sleeve	Brass , Ni - plated	1.4401
Lead bushing	Rubber	Rubber
Other seals	BUNA N	BUNA N

Lengths & Weights

P_N [kW]	" L " Dim. [mm]	Shipping Weight [kg]	Shipping Size [mm]
30	925	146	228 x 430 x 1308
37	1000	157	228 x 430 x 1308
45	1077	171	228 x 430 x 1308
55	1264	196	228 x 430 x 1632
75	1455	241	228 x 447 x 1981
93	1748	318	228 x 447 x 1981
110	1976	382	228 x 447 x 2438
130	2179	430	228 x 447 x 2438
150	2408	473	228 x 447 x 2438

8″ Encapsulated Motors
„HighTemp 75°C“

Submersible Motors

These 8″ encapsulated motors, are built for dependable operation in 8″ diameter or larger water wells with ambient temperature up to 75°C.
It is fitted with water lubricated radial and thrust bearings for maintenance-free operation. The motor is filled with a special FES92 fluid, providing frost protection down to -15ºC storage temperture.
A special diaphragm ensures pressure compensation inside the motor.The Sand fighter® SiC seal system is standard.

Product advantages:

- Up to 75°C ambient temperature
- Increast thrust capacity up to 30°C
- VFD operation is possible up to a rated voltage of 400V
  (in compliance with the application guidelines in the motor operating instructions and the VFD manu
  For VFD operation with higher voltages, please consult Franklin Electric.
- No cooling flow in larger wells (open reservoirs) up to 30°C ambient
- Hermetically sealed encapsulated stator
- Removable “Water Bloc” lead connector
- „Sand fighter®“ Motor with SiC-Mechanical Seal
- High efficiency electrical design for low operation cos
- Standard Motor: WW- Water well Design (Stator 304SS / Castings - CI Powder coated)
- All motors prefilled and 100% tested. Max. storage temperature -15°C - + 60°C
- High temperature leads
- Non contaminating FES 92 filled design

Technical Specifications

- 30 ... 110 kW
- 8″ NEMA double flange
- Protection: IP 68
- Starts per hour: 10
- Installation orientation: Vertical / horizontal (shaft end heightened)
- Standard Voltage: 380-415V/50Hz, 460V/60Hz
- Voltage tolerance 50Hz: -10% / +6% U_N [380-415V = (380-10%) – (415+6%)]
- Voltage tolerance 60Hz: ±10%U_N
- Motor protection: Select thermal overloads according to DIN 61947-4-1
- Insulation: Class F
- Rated ambient temperature: 75°C
- Cooling flow: min. 0,16 m/s
- Motor lead in 4m length

Options

- Other voltages
- YΔ - start (pos. of cables 90°)
- Motors complete in 316 SS
- Motor lead in 8m length

HighTemp 75°C Model numbers 50 Hz*

P_N [kW]	P_N [Hp]	U_N [V]	Model Number Digit 1 – 6		Model Number Digit 7 - 11	
			DOL	YΔ	WW**	316SS
30	40	380 - 415	279 100	279 120	9004X	9204X
37	50	380 - 415	279 101	279 121	9004X	9204X
45	60	380 - 415	279 102	279 122	9004X	9204X
55	75	380 - 415	279 103	279 123	9004X	9204X
75	100	380 - 415	279 104	279 124	9004X	9204X
93	125	380 - 415	279 105	279 125	9004X	9204X
110	150	380 - 415	279 106	279 126	9004X	9204X

HighTemp 75°C Model numbers 60 Hz*

P_N [kW]	$P_{max.}$ [kW]	U_N [V]	Model Number Digit 1 – 6		Model Number Digit 7 - 11	
			DOL	YΔ	WW**	316SS
30	**34,5**	380	279 160	279 180	9004X	9204X
		460	279 100	279 120	9004X	9204X
		575	279 110	279 190	9004X	9204X
37	**42,5**	380	279 161	279 181	9004X	9204X
		460	279 101	279 121	9004X	9204X
		575	279 111	279 191	9004X	9204X
45	**51,7**	380	279 162	279 182	9004X	9204X
		460	279 102	279 122	9004X	9204X
		575	279 112	279 192	9004X	9204X
55	**64**	380	279 163	279 183	9004X	9204X
		460	279 103	279 123	9004X	9204X
		575	279 113	279 193	9004X	9204X
75	**86,2**	380	279 164	279 184	9004X	9204X
		460	279 104	279 124	9004X	9204X
		575	279 114	279 194	9004X	9204X
93	**106,9**	380	279 165	279 185	9004X	9204X
		460	279 105	279 125	9004X	9204X
		575	279 115	279 195	9004X	9204X
110	**126,5**	380	279 166	279 186	9004X	9204X
		460	279 106	279 126	9004X	9204X
		575	279 116	279 196	9004X	9204X

* VFD operation is only allowed up to 400V supply voltage, for higher voltages please consult Franklin Electric Europa GmbH
** WW (Water well)- Stator 304SS / Castings - CI Powder coated

8″ HighTemp 75°C Performance Datas 50 Hz

P_N [kW]	Thrust F [N]	U_N [V]	n_N [min^{-1}]	I_N [A]	I_A [A]	η (Eff.) [%] at % load			cos φ (Pf.) at % load			T_N [Nm]	T_A [Nm]
						50	75	100	50	75	100		
30	45000	380	2920	66,8	474	72	78	80	0,76	0,82	0,86	98,1	265
		400	2930	65,5	499	72	78	80	0,70	0,78	0,83	97,8	298
		415	2935	65,8	518	71	77	80	0,65	0,74	0,80	97,6	324
37	45000	380	2930	80,7	654	75	80	83	0,76	0,83	0,87	121	354
		400	2940	79,6	692	74	80	82	0,70	0,79	0,84	120	398
		415	2945	80,1	720	73	79	82	0,65	0,75	0,81	120	429
45	45000	380	2935	94,3	835	78	83	85	0,75	0,82	0,87	146	413
		400	2945	93,1	884	77	82	84	0,69	0,78	0,84	146	465
		415	2950	93,0	920	76	82	84	0,64	0,74	0,81	146	501
55	45000	380	2920	118	876	78	82	84	0,77	0,84	0,87	183	467
		400	2930	115	927	78	82	84	0,72	0,81	0,85	182	526
		415	2935	113	965	77	82	84	0,69	0,78	0,83	182	566
75	45000	380	2925	155	1185	81	84	85	0,76	0,83	0,87	244	617
		400	2935	151	1254	80	84	86	0,71	0,80	0,85	244	695
		415	2940	150	1306	80	84	85	0,66	0,76	0,82	243	748
93	45000	380	2915	191	1404	81	85	86	0,78	0,85	0,88	304	843
		400	2925	186	1482	81	84	86	0,73	0,80	0,86	304	949
		415	2930	184	1544	80	84	86	0,69	0,76	0,84	303	1021
110	45000	380	2925	231	1596	81	84	85	0,77	0,84	0,88	359	890
		400	2935	224	1690	81	84	86	0,72	0,81	0,85	358	1002
		415	2940	222	1760	80	84	86	0,68	0,77	0,83	357	1078

8″ HighTemp 75°C Performance Datas 60 Hz

P_N [kW]	P_{max} [kW]	Thrust [N]	U_N [V]	n_N [min^{-1}]	I_{max} [A]	I_A [A]	η (Eff.) [%] at 100% load	Line to Line Resistance ohms
30	**34,5**	45000	380	3450	78.7	616	78	.11 - .14
			460	3450	65.0	509	78	.16 - .19
			575	3450	52.0	407	78	.25 - .31
37	**42,5**	45000	380	3450	95.4	832	80	.07 - .09
			460	3450	78.8	687	80	.11 - .14
			575	3450	63.0	550	80	.18 - .22
45	**51,7**	45000	380	3450	112	1081	82	.06 - .07
			460	3450	92.1	893	82	.09 - .11
			575	3450	73.7	715	82	.13 - .16
55	**64**	45000	380	3450	141	1175	82	.05 - .06
			460	3450	114	922	82	.07 - .09
			575	3450	92	738	82	.11 - .14
75	**86,2**	45000	380	3450	181	1508	85	.04 - .05
			460	3450	149	1246	85	.05 - .07
			575	3450	119	997	85	.08 - .10
93	**106,9**	45000	380	3450	223	1793	85	.03 - .04
			460	3450	184	1481	85	.04 - .06
			575	3450	148	1185	85	.07 - .09
110	**126,5**	45000	380	3450	269	2012	84	.02 - .03
			460	3450	222	1662	84	.03 - .05
			575	3450	178	1330	84	.05 - .07

8″ HighTemp 75°C DOL Motor leads* WW/316SS - 380 - 415V 50Hz/ 460V 60 Hz (For YD motors please order 2 of them)

P_N [kW]	Jam Nut Material	L [m]	Ø [mm²]	Part numbers
All Ratings	316SS	4	1 x (3x21 mm²)	10000018731
		8		10000018732

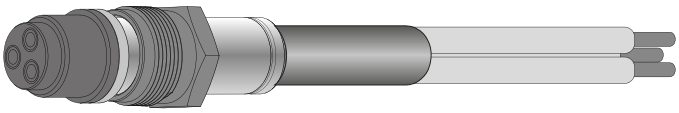

8″ HighTemp 75°C Ground leads* WW/316SS

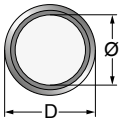

P_N [kW]	L [m]	Ø	D [mm]	Part numbers
All Ratings	8	1G25 mm²	13	308 053 080

8″ HighTemp 75°C Electrical Connection

DOL

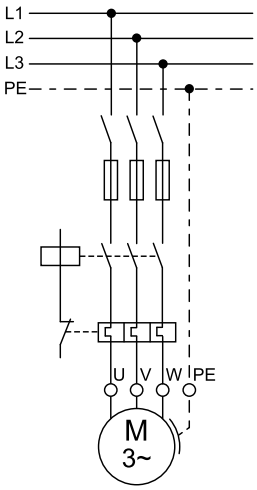

YΔ

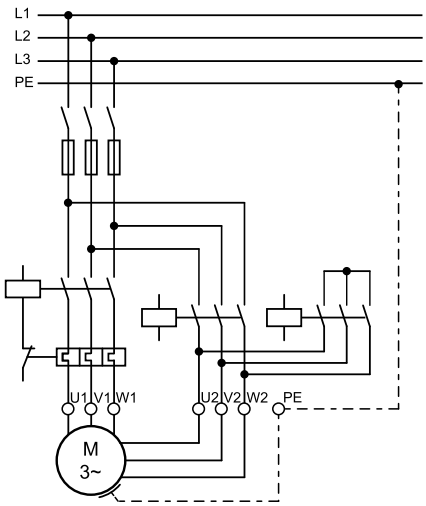

U	V	W	PE
black	grey	brown	yellow/green

8″ HighTemp 75°C Winding Resistance 3~ 50 Hz (20°C)

P_N kW	U_N [V]	Stator Ref.	Line to Line Resistance [Ohm]
30	380 - 415	331 659 ...	0,25 - 0,27
	500		
37	380 - 415	331 677 ...	0,17 - 0,19
	500	326 558 ...	0,09 - 0,01
45	380 - 415	331 678 ...	0,13 - 0,15
	500	326 687 ...	0,20 - 0,22
55	380 - 415	331 679 ...	0,11 - 0,12
	500		
75	380 - 415	331 680 ...	0,08 - 0,09
	500	326 512 ...	0,12 - 0,14
93	380 - 415	331 681 ...	0,14 - 0,15
	500	326 683 ...	0,10 - 0,12
110	380 - 415	331 660 ...	0,05 - 0,06
	500	326 598 ...	0,09 - 0,10

8" HighTemp 75°C WW / 316 Design

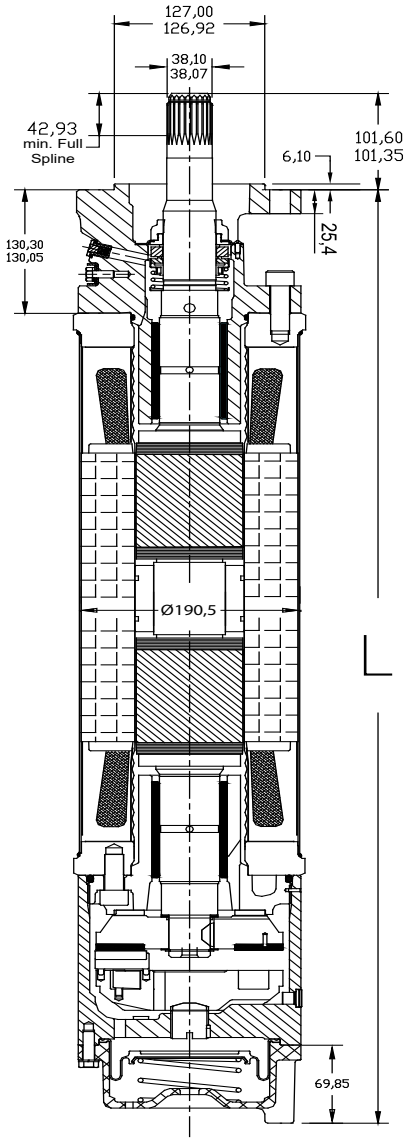

End Bell

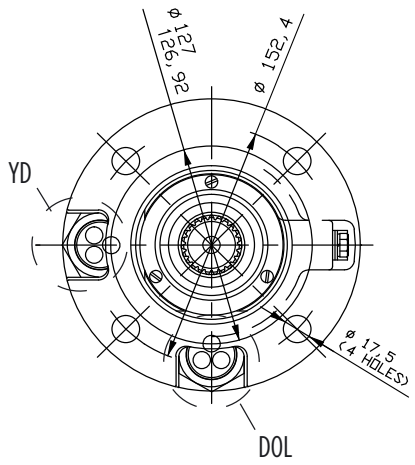

Material DIN / AISI

	WW	316 SS
Castings	Cast Iron /powder coated	316 SS
Stator Shell	304 SS	316 SS
Stator Ends	Low Carbon Steel	316 SS
Shaft Extensions	17-4 SS	17-4 SS
Fasteners	300 & 400 Series SS	316 SS
Seal Cover	304SS & Sintered Bronce	316 SS
Seal	SiC/SiC	SiC/SiC
Diaphragm Spring	302 SS	316 SS & 25-6 MO SS
Slinger	FKM	FKM
Lead Wire (or Cable)	XLPO	XLPO
Lead Potting	Epoxy	Epoxy
Pipe Plug	316 SS	316 SS
Thrust Bearing	Carbon	Carbon

Sizes

P_N [kW]	"L" [mm]	Shipping Weight [KG]	Motor Shipping Size [mm]
30	1138	181	228 x 430 x 1632
37	1265	206	228 x 430 x 1632
45	1455	252	228 x 447 x 1981
55	1748	318	228 x 447 x 1981
75	1976	382	228 x 447 x 2438
93	2179	430	228 x 447 x 2438
110	2408	473	228 x 447 x 2438

8″ Spare Parts WW/316SS HighTemp. 75 °C

Motor design starting 11.2024

Kit A	Thrust Bearing	incl.Pos.: 34; 35; 36; 37; 38; 39; 40; 41; 42	305 428 020
Kit B	Seal Kit	incl.Pos.: 1; 5; 6; 8; 10; 13; 22; 25; 33	308 018 435
Kit C1	Slinger Kit WW	incl.Pos.: 1; 2; 3; 4	308 018 436
Kit C2	Slinger kit 316SS	incl.Pos.: 1; 2; 3; 4	308 018 437
Kit D	Screw Kit WW/316	incl.Pos.: 2; 7; 24; 29	308 659 150
Kit E*	Radial Bearing Type 1 Motors	incl.Pos.: 30; 31; 32	305 428 055
Kit F	Valve Kit 316SS	incl.Pos.: 42, 43	305 351 901

* Parts are semi-finished

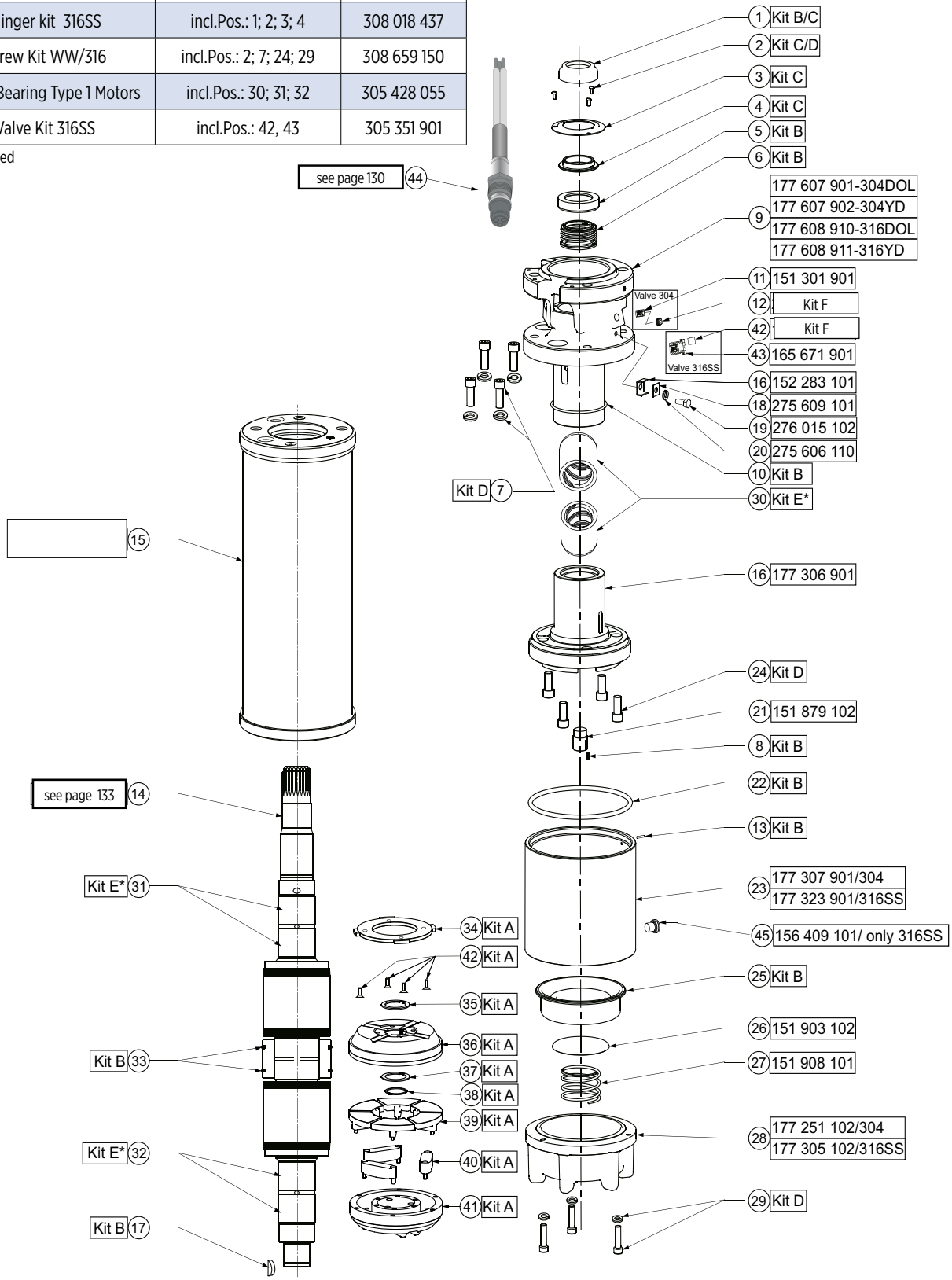

8" HighTemp 75°C Replacement Stators and Rotors 50/60Hz DOL

P_N [kW]	P_N [HP]	[V] / [Hz]	Motor WW	Motor 316SS	Rotor
30	40	380-415 / 50	2791009004X	2791009204X	575 122 919
		460 / 60			
		380 / 60	2791609004X	2791609204X	
37	50	380-415 / 50	2791019004X	2791019204X	575 122 920
		460 / 60			
		380 / 60	2791619004X	2791619204X	
45	60	380-415 / 50	2791029004X	2791029204X	575 122 921
		460 / 60			
		380 / 60	2791629004X	2791629204X	
55	75	380-415 / 50	2791039004X	2791039204X	575 122 922
		460 / 60			
		380 / 60	2791639004X	2791639204X	
75	100	380-415 / 50	2791049004X	2791049204X	575 122 923
		460 / 60			
		380 / 60	2791649004X	2791649204X	
93	125	380-415 / 50	2791059004X	2791059204X	575 122 924
		460 / 60			
		380 / 60	2791659004X	2791659204X	
110	150	380-415 / 50	2791069004X	2791069204X	575 122 918
		460 / 60			
		380 / 60	2791669004X	2791669204X	

** Replacement stators : Please contact Franklin Electric

8" HighTemp 75°C Replacement Stators and Rotors 50/60Hz YΔ

P_N [kW]	P_N [HP]	[V] / [Hz]	Motor WW	Motor 316SS	Rotor
30	**34,5**	380-415 / 50	2791209004X	2791209204X	575 122 919
		460 / 60			
		380 / 60	2791809004X	2791809204X	
37	**42,5**	380-415 / 50	2791219004X	2791219204X	575 122 920
		460 / 60			
		380 / 60	2791819004X	2791819204X	
45	**51,7**	380-415 / 50	2791229004X	2791229204X	575 122 921
		460 / 60			
		380 / 60	2791829004X	2791829204X	
55	**64**	380-415 / 50	2791239004X	2791239204X	575 122 922
		460 / 60			
		380 / 60	2791839004X	2791839204X	
75	**86,2**	380-415 / 50	2791249004X	2791249204X	575 122 923
		460 / 60			
		380 / 60	2791849004X	2791849204X	
93	**106,9**	380-415 / 50	2791259004X	2791259204X	575 122 924
		460 / 60			
		380 / 60	2791859004X	2791859204X	
110	**126,5**	380-415 / 50	2791269004X	2791269204X	575 122 918
		460 / 60			
		380 / 60	2791869004X	2791869204X	

** Replacement stators : Please contact Franklin Electric

6″ REWINDABLE MOTOR

Rewindable motors with best class winding wires

SAND FIGHTER | STAINLESS STEEL 304 | STAINLESS STEEL 316 | STAINLESS STEEL 904L

FEATURES & BENEFITS

- 6″ NEMA mounting design
- Stainless steel splined shaft
- VFD operation is possible up to a supply voltage of 460V and with PE2/PA (in compliance with the application guidelines in the motor operating instructions and the VFD manufacturer). For VFD operation with higher voltages, please consult Franklin Electric.
- Factory filled with Franklin's FES93 motor fill solution
- Liquid lubricated radial bearings and High capacity Kingsbury type thrust bearing for 100 % maintenance free operation
- Pressure-equalizing diaphragm, spring pre-loaded
- SandFighter™ sealing system with SIC mechanical seal and sand slinger
- High efficiency electrical design for low operation costs
- Drinking water approvals

STANDARD SPECIFICATION

- Ratings: 4 - 37 kW
- Max. storage temperature - 15 °C to + 60 °C
- Standard motor with PPC winding insulation (37 kW Standard with PE2/PA insulation)
- Nominal ambient temperature: 30 °C
  with 0.2 m/s cooling flow for 4 - 15 kW motors
  with 0.5 m/s cooling flow for 18.5 - 37 kW motors
- Standard Voltage: 380 - 415 V (50 Hz), 460 V (60 Hz)
- Voltage Tolerance: 50 Hz: -10 % / +6 % U_N [380 - 415 V = (380 - 10 %) – (415 + 6 %)] 60 Hz: ±10 % U_N
- Protection IP68
- Motor protection: DIN 61947-4-1
- Frequency of starts: 20 starts/ hour (with min. 3 minutes resting time), equally distributed
- DOL / YΔ - start (pos. of cables 90 °)
- Motor lead length: 4 m
- Installation orientation: Vertical / horizontal (shaft end heightened) - 37 kW motors may not be installed in horizontal position (if required please contact Franklin Electric).
- Rotation counter clock wise facing shaft end (rotation reversible)
- All motors with factory installed leads

OPTIONS

- Higher-graded materials: 316SS and 904L
- Special voltages
- Retrofitable PT 100 temperature sensor
- Special lead lengths up to 50 m
- Motors up to 30 kW with PE2/PA winding insulation for max. ambient temperature of 50 °C
  (Standard cooling flows, 37 kW: max. 45 °C)

6" Rewindable Motors - Model Numbers *

P_N [kW]	U_N / f [V] / [Hz]	Model Number Digit 1 – 6		Model Number Digit 7 – 10			
		DOL	YΔ	304SS	316SS	904L	PE2/PA**
4,0	380 - 415 / 50 460 / 60	262 610	262 710	8611	6611	7611	*7** ONLY DOL
	380/ 60	262 660	262 780				
	230 / 60	262 600	262 700				
5,5	380 - 415 / 50 460 / 60	262 611	262 711	8611	6611	7611	*7** ONLY DOL
	500 / 50	262 511	262 811				
	380/ 60	262 661	262 781				
	230 / 60	262 601	262 721				
7,5	380 - 415 / 50 460 / 60	262 612	262 712	8611	6611	7611	*7** ONLY DOL
	500 / 50	262 512	262 812				
	380/ 60	262 662	262 782				
	230 / 60	262 602	262 722				
9,3	380 - 415 / 50 460 / 60	262 231	262 331	8611	6611	7611	*7** ONLY DOL
	500 / 50	262 271	262 371				
	380/ 60	262 221	262 321				
	230 / 60	262 211	262 311				
11	380 - 415 / 50 460 / 60	262 613	262 713	8611	6611	7611	*7** ONLY DOL
	500 / 50	262 513	262 813				*7**
	380/ 60	262 663	262 783				
	230 / 60	262 603	262 723				
13	380 - 415 / 50 460 / 60	262 232	262 332	8611	6611	7611	*7** ONLY DOL
	500 / 50	262 272	262 372				*7**
	380/ 60	262 222	262 322				
	230 / 60	262 212	262 312				
15	380 - 415 / 50 460 / 60	262 614	262 714	8611	6611	7611	*7**
	500 / 50	262 514	262 814				
	380/ 60	262 664	262 784				
	230 / 60	262 604	262 724				
18,5	380 - 415 / 50 460 / 60	262 615	262 715	8611	6611	7611	*7**
	500 / 50	262 515	262 815				
	380/ 60	262 665	262 785				
	230 / 60	262 605	262 725				
22	380 - 415 / 50 460 / 60	262 616	262 716	8611	6611	7611	*7**
	500 / 50	262 516	262 816				
	380/ 60	262 666	262 786				
	230 / 60	262 606	262 726				
26	380 - 415 / 50 460 / 60	262 233	262 333	8611	6611	7611	*7**
	500 / 50	262 273	262 373				
	380/ 60	-	262 323				
30	380 - 415 / 50 460 / 60	262 617	262 717	8611	6611	7611	*7**
	500 / 50	262 517	262 817				
	380/ 60	262 667	262 787				
	230 / 60	-	262 727				
37	380 - 415 / 50 460 / 60	262 618	262 718	8711	6711	7711	STANDARD
	500 / 50	262 518	262 818				
	380/ 60	262 668	262 788				
	230 / 60	-	262 728				

* VFD operation is only allowed up to 460V supply voltage, for higher voltages please consult Franklin Electric Europa GmbH
** For VFD Operation is PE2/PA mandatory!

6" Rewindable Motors - Performance Data 50Hz

P_N [kW]	Thrust F [N]	U_N [V]	n_N [min-1]	I_N [A]	I_A [A]	η (Eff.) [%] at % load			cos φ (PF) at % load			T_N [Nm]	T_A [Nm]
						50	75	100	50	75	100		
4	15500	380	2910	10,4	48	71	75	76	0,59	0,71	0,78	13,1	15,5
		400	2930	10,6	51	68	73	76	0,53	0,65	0,73	13,1	17,3
		415	2930	10,9	53	65	72	76	0,50	0,61	0,69	13,0	18,8
5,5	15500	380	2860	13,7	48	74	76	75	0,67	0,78	0,83	18,3	15,5
		400	2890	13,3	51	72	76	76	0,62	0,74	0,81	18,2	17,3
		415	2890	13,4	53	71	75	75	0,59	0,71	0,78	18,1	18,8
		500	2890	10,6	41	72	76	76	0,62	0,74	0,81	17	18
7,5	15500	380	2860	18,3	59	77	78	76	0,70	0,80	0,84	25,0	19,2
		400	2880	17,7	63	75	78	77	0,65	0,76	0,82	24,8	21,5
		415	2890	17,7	65	73	77	77	0,61	0,73	0,80	24,7	23,4
		500	2880	14,0	50	75	78	77	0,65	0,76	0,82	22	25
9,3	15500	380	2850	22,0	74	79	80	78	0,71	0,80	0,84	31,1	25,9
		400	2870	21,4	78	78	79	78	0,64	0,76	0,82	31,0	29,0
		415	2880	21,2	81	76	79	78	0,60	0,72	0,80	30,9	31,4
		500	2870	17,1	62	78	79	78	0,64	0,76	0,82	29	31
11,0	15500	380	2860	25,8	93	78	80	78	0,71	0,80	0,85	36,7	31,5
		400	2880	25,2	98	77	80	79	0,65	0,76	0,83	36,4	35,3
		415	2890	25,1	102	75	78	79	0,61	0,73	0,80	36,3	38,2
		500	2880	20,0	79	77	80	79	0,65	0,76	0,82	35	36
13,0	15500	380	2880	30,1	118	80	81	80	0,68	0,79	0,84	43,1	45,0
		400	2900	29,6	125	78	80	80	0,61	0,74	0,81	42,8	50,3
		415	2900	29,7	130	76	79	80	0,57	0,70	0,78	42,7	54,6
		500	2900	23,7	100	78	80	80	0,61	0,74	0,81	50	43
15,0	15500	380	2880	33,9	140	81	82	81	0,71	0,81	0,85	49,7	53,9
		400	2890	33,1	148	79	81	81	0,65	0,77	0,83	49,4	60,4
		415	2900	33,0	154	77	80	81	0,60	0,73	0,81	49,3	65,5
		500	2890	26,4	119	79	81	81	0,65	0,77	0,83	60	49
18,5	15500	380	2860	42,3	172	81	82	81	0,68	0,78	0,84	61,7	75,2
		400	2880	42,0	182	78	81	81	0,61	0,74	0,80	61,2	84,3
		415	2890	42,5	189	76	79	80	0,57	0,70	0,77	61,1	91,3
		500	2880	33,6	146	78	81	81	0,61	0,74	0,80	84	61
22,0	15500	380	2880	49,1	218	82	84	83	0,68	0,78	0,84	72,6	91,2
		400	2900	49,0	231	80	82	82	0,61	0,73	0,80	72,5	102,2
		415	2910	49,6	240	77	81	82	0,56	0,69	0,77	72,2	110,7
		500	2900	39,2	185	80	82	82	0,61	0,73	0,80	102	72
26	15500	380	2880	57,5	268	83	84	83	0,68	0,79	0,86	86,0	120,4
		400	2900	56,7	284	81	83	83	0,61	0,74	0,83	85,6	134,7
		415	2910	57,3	296	78	82	82	0,56	0,69	0,80	85,3	146,1
		500	2900	45,7	227	80	83	83	0,61	0,74	0,81	135	86
30,0	27500	380	2900	66,4	328	82	84	83	0,67	0,78	0,84	98,8	135,0
		400	2910	66,4	347	80	83	83	0,60	0,73	0,80	98,4	151,0
		415	2910	67,5	361	77	81	82	0,55	0,68	0,77	98,2	163,0
		500	2910	53,2	277	80	83	83	0,60	0,73	0,80	151	98
37	27500	380	2890	82,0	409	83	84	83	0,67	0,78	0,85	122,1	192,8
		400	2900	81,9	433	80	83	83	0,60	0,72	0,80	121,6	215,8
		415	2910	83,9	450	77	81	82	0,55	0,68	0,76	121,3	234,0
		500	2900	65,6	346	80	83	83	0,60	0,72	0,80	216	122

6″ Rewindable Motors - Performance Data 60Hz

P_N [kW]	P_{max} [kW]	Thrust F [N]	U_N [V]	n_{max} [min1]	I_{max} [A]	I_A [A]	η_{max} (Eff.) [%] at % load			cos φ_{max} (Pf.) at % load			T_{max} [Nm]	T_A [Nm]
							50	75	100	50	75	100		
4	**4,6**	15500	230	3520	21,0	106	70	75	77	0,52	0,64	0,73	12,5	18,6
			380	3530	13,3	61	66	72	77	0,51	0,63	0,71	12,4	15,0
			460	3520	10,1	51	70	76	78	0,56	0,67	0,75	12,5	15,3
5,5	**6,3**	15500	230	3490	26,1	106	74	78	78	0,61	0,73	0,80	17,3	15,9
			380	3480	15,4	61	76	78	78	0,64	0,75	0,81	17,3	15,0
			460	3480	12,9	51	74	77	77	0,65	0,76	0,82	17,3	15,1
7,5	**8,6**	15500	230	3490	35,9	146	75	79	79	0,58	0,71	0,78	23,6	22,4
			380	3480	20,8	81	76	79	79	0,64	0,75	0,81	23,6	20,2
			460	3470	17,2	64	75	78	78	0,67	0,77	0,82	23,7	19,4
9,3	**10,7**	15500	230	3490	44,4	183	75	79	79	0,59	0,71	0,78	29,3	28,9
			380	3470	25,6	100	77	80	80	0,64	0,75	0,81	29,4	25,9
			460	3460	20,8	78	78	80	80	0,67	0,78	0,82	29,4	24,4
11,0	**12,7**	15500	230	3490	51,2	220	77	80	81	0,60	0,72	0,79	34,6	35,6
			380	3490	30,3	129	77	81	81	0,62	0,74	0,80	34,5	34,3
			460	3480	25,0	98	78	81	80	0,68	0,77	0,83	34,7	31,5
13,0	**15,0**	15500	230	3500	62,4	288	76	80	81	0,55	0,68	0,76	40,7	50,5
			380	3500	36,3	164	77	81	82	0,59	0,71	0,78	40,7	47,2
			460	3490	29,0	125	78	81	81	0,65	0,76	0,82	40,9	43,3
15,0	**17,3**	15500	230	3500	65,9	325	80	83	83	0,63	0,74	0,81	47,0	59,5
			380	3490	39,1	188	81	83	83	0,66	0,77	0,82	47,2	56,5
			460	3490	32,1	151	80	83	83	0,68	0,78	0,84	47,1	55,6
18,5	**21,3**	15500	230	3490	85,4	402	77	81	82	0,59	0,71	0,78	58,1	81,8
			380	3490	52,5	249	76	80	81	0,58	0,70	0,77	58,1	83,6
			460	3480	40,6	184	80	82	82	0,65	0,76	0,81	58,4	74,5
22,0	**25,3**	15500	230	3510	100,2	520	82	84	84	0,65	0,74	0,77	68,8	96,6
			380	3510	59,9	309	82	84	84	0,67	0,75	0,78	68,8	94,9
			460	3500	47,1	232	83	84	84	0,72	0,79	0,82	69,1	85,8
26	**29,9**	15500	230	3510	118,3	657	83	85	85	0,63	0,72	0,76	81,3	135,0
			380	3500	67,5	360	83	85	85	0,62	0,74	0,81	81,6	121,4
			460	3500	55,7	287	83	85	85	0,64	0,76	0,84	81,6	117,2
30,0	**34,5**	27500	230	3510	135,7	758	78	82	83	0,58	0,71	0,78	93,8	139,6
			380	3510	79,6	436	79	83	84	0,62	0,74	0,81	93,9	132,9
			460	3500	64,4	346	81	84	84	0,64	0,75	0,82	94,0	126,4
37,0	**42,6**	27500	230	3510	169,9	937	77	81	82	0,59	0,71	0,78	115,8	193,6
			380	3510	102,8	567	77	81	82	0,59	0,71	0,78	115,8	193,6
			460	3500	79,1	430	82	84	85	0,63	0,75	0,81	116,0	177,8

6" Rewindable Motors - Motor Leads*

DOL	P_N [kW]	St.#	Ø [mm²]	H / B [mm]	Length [m]	Lead Mod.- Nr.	Motor Design up to 12.2012			Motor Design starting 01.2013
							Lead seal Kit WW	Lead seal Kit 316 SS	Lead seal Kit 904 L	Lead seal Kit
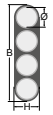	**4 - 13**	1	4G2,5	7,0 x 19,0	4	308 710 100	308 660 801	308 660 821	308 660 831	308 660 811
	15 - 22	1	4G4	8,2 x 23,0	4	308 710 101	308 660 802	308 660 822	308 660 832	308 660 812
	26 - 37	1	4G6	9,0 x 25,0	4	308 710 103	308 660 803	308 660 823	308 660 833	308 660 813
For PE2/PA motors additionally the special Tape **700 541 688** is absolutely necessary										

YΔ	P_N [kW]	St.#	Ø [mm²]	B / H [mm]	Length [m]	Lead Mod.- Nr.	Motor Design up to 12.2012			Motor Design starting 01.2013
							Lead seal Kit WW	Lead seal Kit 316 SS	Lead seal Kit 904 L	Lead seal Kit
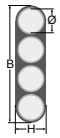	**4 - 22**	1	3X2,5	7,3 x 15,3	4	308 710 104	308 660 806	308 660 826	308 660 836	308 660 816
		1	4G2,5	7,0 x 19,0	4					
	26 - 30	1	3X4	8,5 x 17,8	4	308 710 105	308 660 807	308 660 827	308 660 837	308 660 817
		1	4G4	8,2 x 23,0	4					
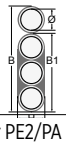	**37**	1	3X4	8,5 x 17,8	4	308 710 106	308 660 807	308 660 827	308 660 837	308 660 817
		1	4G4	8,2 x 23,0	4					
For PE2/PA motors additionally the special Tape **700 541 688** is absolutely necessary										

*Cables are designed for submerged operation. For air operation please consult Franklin Electric.

Ground Leads*

	P_N [kW]	Ø	Size [mm]	Type	Qty.	L (m)	Part Numbers 304SS / 316SS
	all Ratings	1G10 mm²	D 6,1 mm (±0,3)	VDE/KTW	1	4	308 055 040

*only for 304SS and 316SS

Lead opening seal Kit	Motor Design starting 01.2013	
4 - 37 kW DOL / YΔ	**Kit**	308 660 815

Electrical Connection

DOL

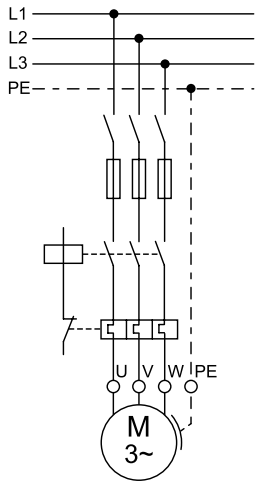

DOL II

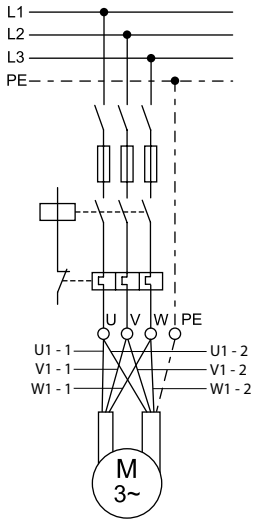

YΔ

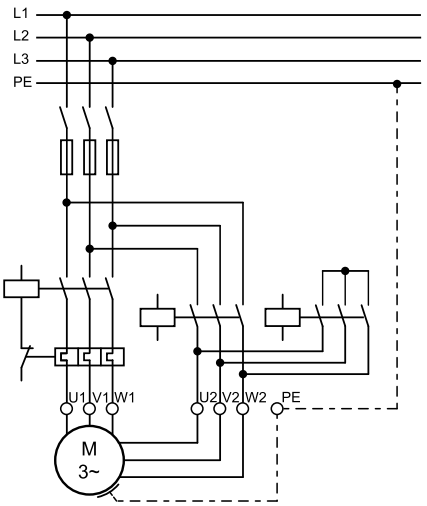

U	V	W	PE
brown	grey	black	yellow/green

6″ Rewindable De-Rating Curves

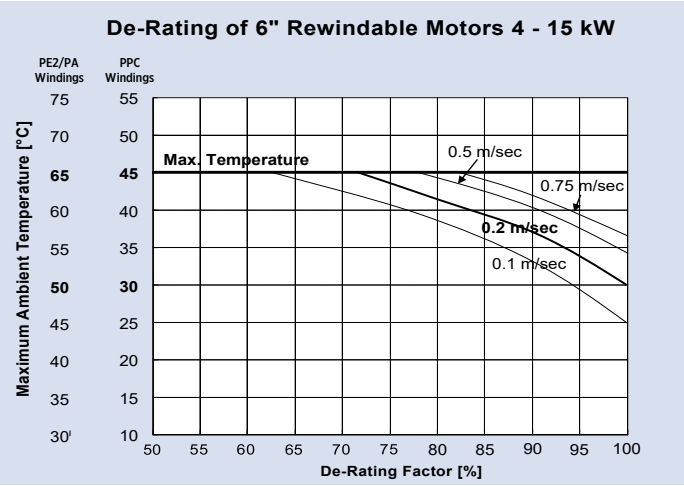

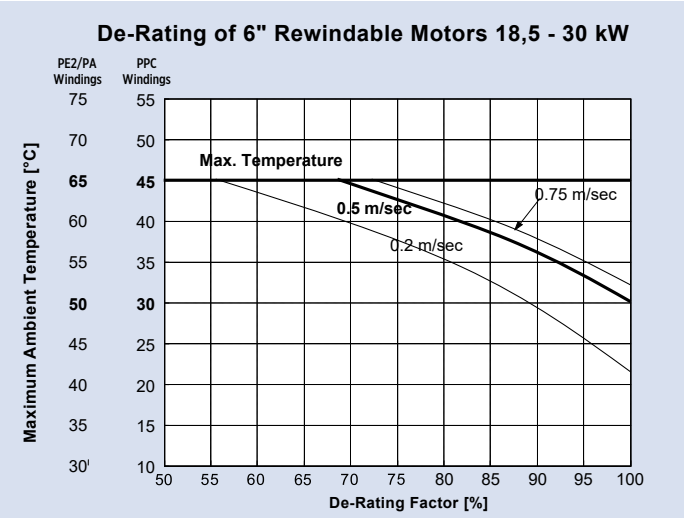

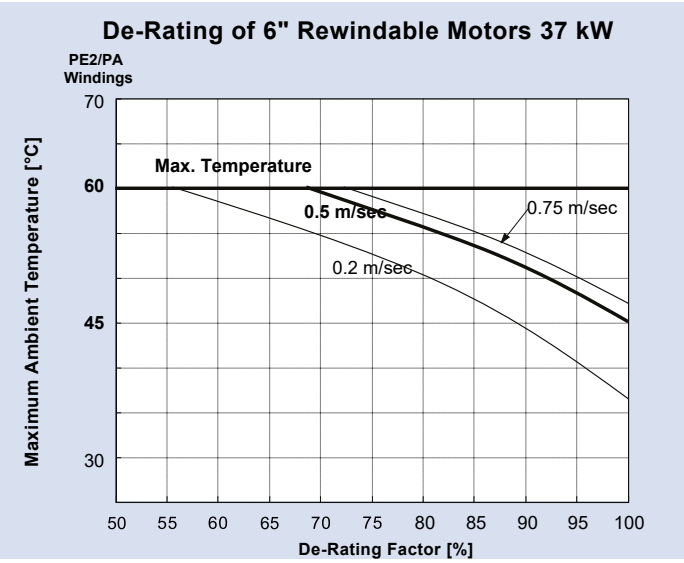

If these conditions are not met please contact Franklin Electric !

6" Rewindable Motor Design

304SS / 316SS / 904L

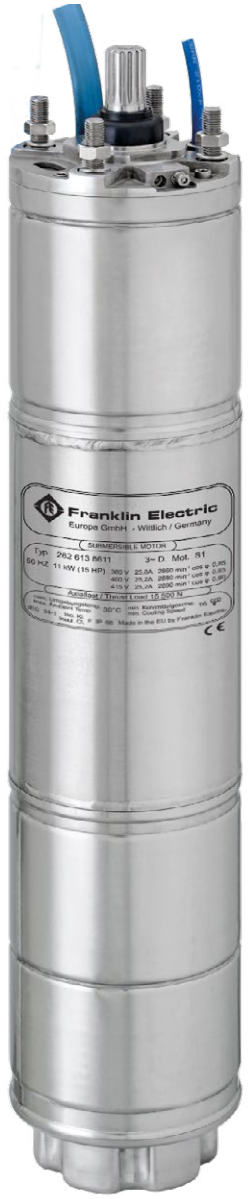

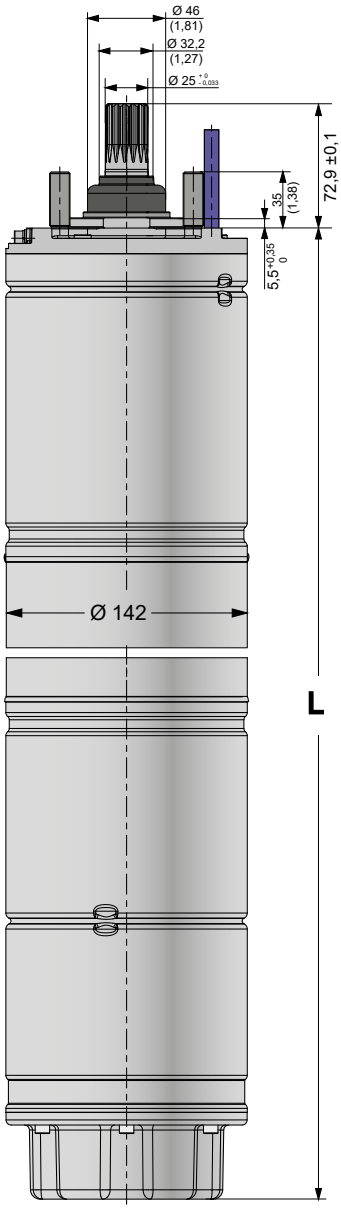

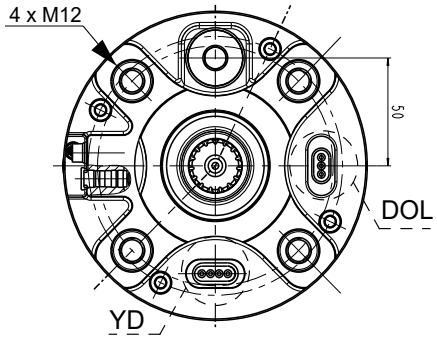

Construction Materials

Component	304SS	316SS	904L
Shaft Extensions	1.4462	1.4462	1.4462
Slinger	EPDM	EPDM	EPDM
Seal	SiC/SiC	SiC/SiC	SiC/SiC
End bell, NEMA	1.4308	1.4408	1.4539
Stator Shell	1.4301	1.4571	1.4539
Diaphragm	EPDM	EPDM	EPDM
Diaphragm Cover	1.4301	1.4404	1.4539

P [kW]	Motor Lengths	Motor weights [kg]		Motor Shipping Size		
	L [mm] 304SS / 316SS /904L	304SS / 316SS / 904L		B [mm]	H [mm]	L [mm]
		Motor	incl. pack			
4	679	43	49	158	316	908
5,5	679	43	49			
7,5	699	45	51			
9,3	729	49	55			
11	759	53	59			
13	809	57	64	158	316	1138
15	854	61	68			
18,5	899	66	73			
22	989	77	84			
26	1094	88	97	158	316	1438
30	1194	98	107			
37	1274	105	114			

PPC Insulation Standard Windings (380 – 415 V / 50 Hz and 460 V / 60 Hz)

P_N [kW]	Mod.-No. Windingkit	Turns per coil	Wire diameter [mm]	Type of Isolation	Group connection	Total Wire length [m]	Resistance coil [Ω]	Resistance YD (U1-U2) [Ω]	Resistance Dol (U1-V1) [Ω]
4	326 364 999	53+53+53+53	0,9 / 1,6	PPC	Serie	540	4,8800	5,1700	3,5000
5,5	326 364 999	53+53+53+53	0,9 / 1,6	PPC	Serie	540	4,8800	5,1700	3,5000
7,5	326 375 999	47+47+47+47	1,0 / 1,7	PPC	Serie	500	3,6710	4,0400	2,7200
9,3	326 374 999	41+41+41+41	1,1 / 1,8	PPC	Serie	466	2,8270	3,0200	2,0600
11	326 373 999	36+36+36+36	1,2 / 1,9	PPC	Serie	436	2,2200	2,3500	1,6060
13	326 372 999	30+30+30+30	1,3 / 2,0	PPC	Serie	400	1,7330	1,8800	1,2430
15	326 366 999	27+27+27+27	1,4 / 2,2	PPC	Serie	395	1,4550	1,5260	1,0160
18,5	326 371 999	23+23+23+23	1,5 / 2,3	PPC	Serie	362	1,1610	1,2220	0,8250
22	326 370 999	19+19+19+19	1,7 / 2,5	PPC	Serie	342	0,8520	0,9200	0,7130
26	326 378 999	16+16+16+16	1,9 /2,7	PPC	Serie	330	0,6570	0,6980	0,4700
30	326 369 999	27+27	1,4 / 2,2	PPC	Parallel	624	0,3810	0,6100	0,4120
37	326 377 999	12+12+12+12	2,0/ 2,9 / 3,1	PE2/PA	Serie	302	0,5420	0,5900	0,3840

PE2/PA Insulation Standard Windings (380 – 415 V / 50 Hz and 460 V / 60 Hz)

P_N [kW]	Mod.-No. Windingkit	Turns per coil	Wire diameter [mm]	Type of Isolation	Group connection	Total Wire length [m]	Resistance coil [Ω]	Resistance YD (U1-U2) [Ω]	Resistance Dol (U1-V1) [Ω]
4	326 461 999	30+30+30+30	1,1 / 2,0	PE2/PA	Serie Y	311	1,8500	-	3,7000
5,5	326 461 999	30+30+30+30	1,1 / 2,0	PE2/PA	Serie Y	311	1,8500	-	3,7000
7,5	326 428 999	27+27+27+27	1,3 / 2,2	PE2/PA	Serie Y	295	1,2480	-	2,4960
9,3	326 429 999	23+24+24+23	1,4 / 2,4	PE2/PA	Serie Y	274	1,0060	-	2,3200
11	326 430 999	20+21+21+20	1,4 / 2,4	PE2/PA	Serie Y	255	0,9280	-	1,8560
13	326 431 999	17+18+18+17	1,6 / 2,6	PE2/PA	Serie Y	240	0,6670	-	1,3340
15	326 432 999	27+27+27+27	1,3 / 2,2	PE2/PA	Serie	395	1,6870	1,6870	1,2466
18,5	326 433 999	23+23+23+23	1,3 / 2,2	PE2/PA	Serie	362	1,5500	1,5500	1,0333
22	326 434 999	19+19+19+19	1,5 / 2,5	PE2/PA	Serie	342	1,0940	1,0940	0,7293
26	326 435 999	16+16+16+16	1,7 / 2,7	PE2/PA	Serie	330	0,8210	0,8210	0,5473
30	326 436 999	27+27	1,3 / 2,2	PE2/PA	Parallel	624	1,3260	0,6630	0,4420
37	326 377 999	12+12+12+12	2,0/ 2,9 / 3,1	PE2/PA	Serie	302	0,5420	0,5900	0,3840

Insulation resistance (20°C / 500 VDC)

New motor without drop cable	400 >	MΩ
Used motor without drop cable	20 >	MΩ
New motor with drop cable	4 >	MΩ
Used motor with drop cable	1	MΩ

Motor Repair instruction

Pictured Repair instruction	**WW**	Motor Design up to 12.2012	Mod.- Nb. :	308 018 460
	316SS / 904L			308 018 ***
	304SS / 316SS / 904L	Motor Design starting 01.2013		308 018 607

6″ Rewindable Spare Parts 304SS / 316SS / 904L

Kit 1	Thrust Bearing Kit	4-26kW	Pos.: 17; 25; 26; 27; 36	308 750 301
		30-37kW		308 750 302
Kit 2	Radial Bearing Kit	4-26kW	Pos.: 12; 28	308 750 401
		30-37kW		308 750 402
Kit 3A	Seal Kit Standard 304SS / 316SS / 904L	Pos.: 1; 4; 6.1; 15; 17; 20; 34; 42.1, 43		308 800 422
Kit 3B	Seal Kit Viton 304SS / 316SS / 904L	Pos.: 1; 4; 6.1; 15; 17; 20; 34; 42.1, 43		308 800 424
Kit 4	Screw Kit 304SS / 316SS	Pos.: 5; 5.1; 6; 6.1; 9; 13; 15; 24; 42; 42.1		308 659 325
	Screw Kit 904L	Pos.: 5; 6; 6.1; 9; 13; 15; 24; 42; 42.1		308 659 326
Kit 5	Valve Kit (all material versions)	Pos.: 8; 10		308 800 423
Kit 6	Lead Seal Kit	Pos.: 7; 6.1; 42.1		see page 138
Kit 7	PT100 Kit	Pos.: 35		see page 202

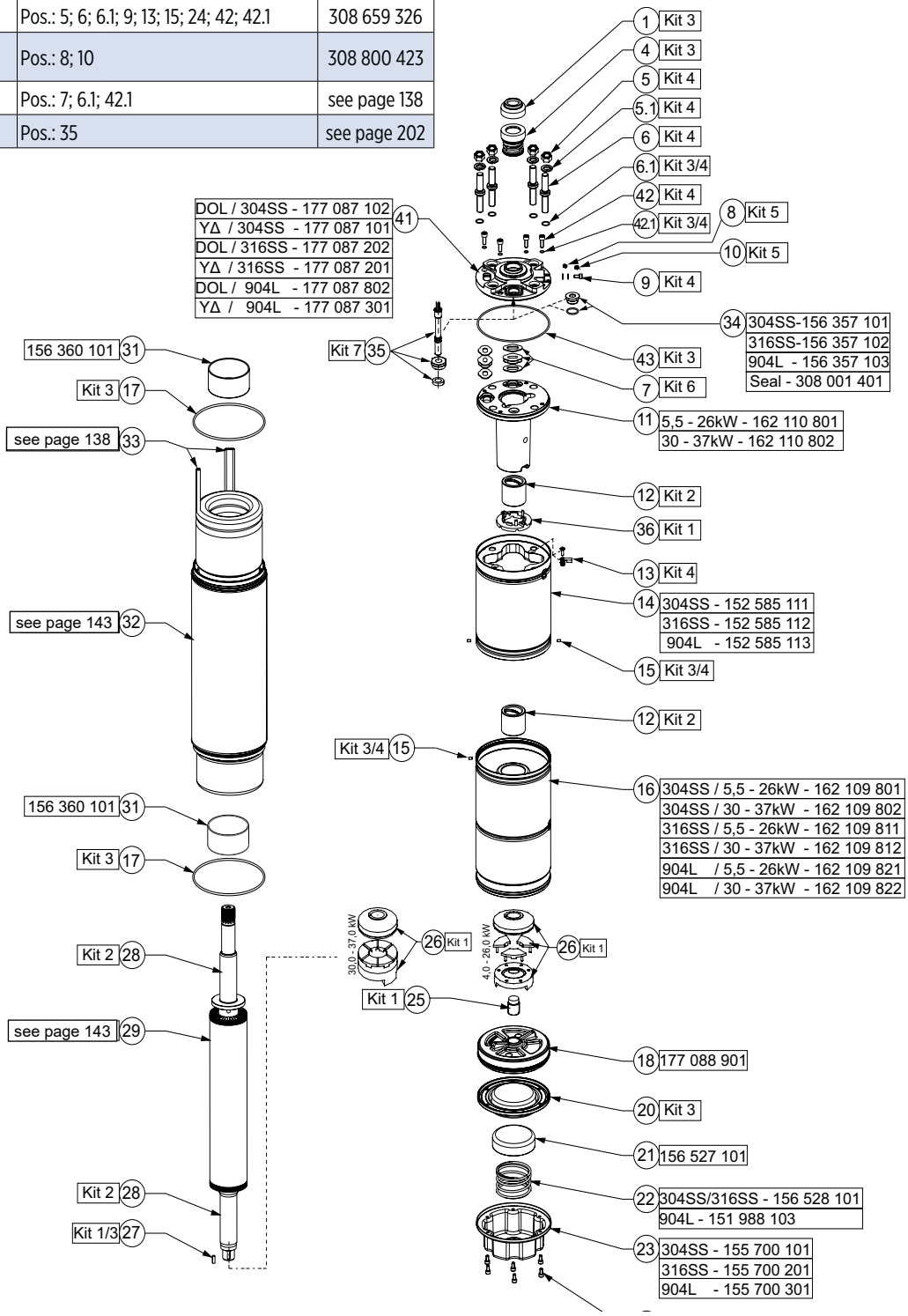

304SS Stator and Rotor Model Number (380 - 415 Volts / 50Hz) (starting 08.2012)

P_N [kW]	Stator (incl. winding and 4m motor lead)				Rotor
	DOL 304		YD 304		
	PPC	PE2/PA	PPC	PE2/PA	
4	326 364 811	326 461 811	326 364 861		161 177 801K
5,5	326 364 811	326 461 811	326 364 861		161 177 801K
7,5	326 375 811	326 428 811	326 375 861		161 177 802K
9,3	326 374 811	326 429 811	326 374 861		161 177 803K
11	326 373 811	326 430 811	326 373 861		161 177 804K
13	326 372 811	326 431 811	326 372 861		161 177 805K
15	326 366 811	326 432 811	326 366 861	326 432 861	161 177 806K
18,5	326 371 811	326 433 811	326 371 861	326 433 861	161 177 807K
22	326 370 811	326 434 811	326 370 861	326 434 861	161 176 804K
26	326 378 811	326 435 811	326 378 861	326 435 861	161 176 803K
30	326 369 811	326 436 811	326 369 861	326 436 861	161 176 802K
37		326 377 811		326 377 861	161 176 801K

316SS Stator and Rotor Model Number (380 - 415 Volts / 50Hz) (starting 08.2012)

P_N [kW]	Stator (incl. winding and 4m motor lead)				Rotor
	DOL 316SS		YD 316SS		
	PPC	PE2/PA	PPC	PE2/PA	
4	326 364 821	326 461 821	326 364 871		161 177 801K
5,5	326 364 821	326 461 821	326 364 871		161 177 801K
7,5	326 375 821	326 428 821	326 375 871		161 177 802K
9,3	326 374 821	326 429 821	326 374 871		161 177 803K
11	326 373 821	326 430 821	326 373 871		161 177 804K
13	326 372 821	326 431 821	326 372 871		161 177 805K
15	326 366 821	326 432 821	326 366 871	326 432 871	161 177 806K
18,5	326 371 821	326 433 821	326 371 871	326 433 871	161 177 807K
22	326 370 821	326 434 821	326 370 871	326 434 871	161 176 804K
26	326 378 821	326 435 821	326 378 871	326 435 871	161 176 803K
30	326 369 821	326 436 821	326 369 871	326 436 871	161 176 802K
37		326 377 821		326 377 871	161 176 801K

904L Stator and Rotor Model Number (380 - 415 Volts / 50Hz) (starting 08.2012)

P_N [kW]	Stator (incl. winding and 4m motor lead)				Rotor
	DOL 904L		YD 904L		
	PPC	PE2/PA	PPC	PE2/PA	
4	326 364 831	326 461 831	326 364 881		161 177 801K
5,5	326 364 831	326 461 831	326 364 881		161 177 801K
7,5	326 375 831	326 428 831	326 375 881		161 177 802K
9,3	326 374 831	326 429 831	326 374 881		161 177 803K
11	326 373 831	326 430 831	326 373 881		161 177 804K
13	326 372 831	326 431 831	326 372 881		161 177 805K
15	326 366 831	326 432 831	326 366 881	326 432 881	161 177 806K
18,5	326 371 831	326 433 831	326 371 881	326 433 881	161 177 807K
22	326 370 831	326 434 831	326 370 881	326 434 881	161 176 804K
26	326 378 831	326 435 831	326 378 881	326 435 881	161 176 803K
30	326 369 831	326 436 831	326 369 881	326 436 881	161 176 802K
37		326 377 831		326 377 881	161 176 801K

8″ REWINDABLE MOTOR

Rewindable motors with best class winding wires

SAND FIGHTER | WATER WELL WW CI PC / 304SS | OPTIONAL STAINLESS STEEL 316 | OPTIONAL STAINLESS STEEL 904L

FEATURES & BENEFITS

- 8″ double flange NEMA mounting design
- Stainless steel splined shaft
- VFD operation is possible up to a supply voltage of 460V and with PE2/PA (in compliance with the application guidelines in the motor operating instructions and the VFD manufacturer). For VFD operation with higher voltages, please consult Franklin Electric.
- Factory filled with Franklin's FES93 motor fill solution
- Liquid lubricated radial bearings and High capacity Kingsbury type 45 kN thrust bearing for 100 % maintenance free operation
- Pressure-equalizing diaphragm, spring pre-loaded
- SandFighter™ sealing system with SIC mechanical seal and sand slinger
- Standard Motor: WW- Water well Design (Stator 304SS / Castings - CI Powder coated)
- High efficiency electrical design for low operation costs
- Drinking water approvals

STANDARD SPECIFICATION

- Ratings: 30 - 93 kW
- Max. storage temperature - 15 °C to + 60 °C
- Standard motor with PPC winding insulation
- Nominal ambient temperature: 30 °C
  with 0.2 m/s cooling flow for 30 - 52 kW motors
  with 0.5 m/s cooling flow for 55 - 93 kW motors
- Standard Voltage: 380 - 415 V (50 Hz), 460 V (60 Hz)
- Voltage Tolerance: 50 Hz: -10 % / +6 % U_N [380 - 415 V = (380 - 10 %) – (415 + 6 %)], 60 Hz: ±10 % U_N
- Protection IP68
- Motor protection: DIN 61947-4-1
- Frequency of starts: 10 starts/ hour (with min. 3 minutes resting time), equally distributed
- DOL / Y**Δ** - start (pos. of cables 90 °)
- Motor lead length: 6 m
- Installation orientation: Vertical / horizontal (shaft end heightened) - 83/93 kW motors may not be installed in horizontal position (if required please contact Franklin Electric)
- Rotation counter clock wise facing shaft end (rotation reversible)
- All motors with factory installed leads

OPTIONS

- Higher-graded materials: 316SS and 904L
- Special voltages
- Retrofitable PT 100 temperature sensor
- PE2/PA winding insulation for max. ambient temperature of 50 °C (Standard cooling flows)
- Special lead lengths on request

High Efficiency System Paket

SYSTEM PACKAGE

- NEMA Synchron motors
- Frequency converter
- matchet output filter

▶ 8″ High Efficiency System

8" Rewindable Motors - Model Numbers 50Hz / 60Hz *

P_N [kW]	U_N / f	Model Number Digit 1 – 6		Model Number Digit 7 – 10					
	[V] / [Hz]	DOL	YΔ	WW***	316 SS	904L	PE2/PA**		
							WW***	316 SS	904L
30	380 - 415 / 50 460 / 60	263 610	263 710	5111	6111	7111	5311	6311	7311
	380 / 60	263 660	263 780						
37	380 - 415 / 50 460 / 60	263 611	263 711	5111	6111	7111	5311	6311	7311
	380 / 60	263 661	263 781						
45	380 - 415 / 50 460 / 60	263 612	263 712	5111	6111	7111	5311	6311	7311
	380 / 60	263 662	263 782						
52	380 - 415 / 50 460 / 60	263 260	263 270	5111	6111	7111	5311	6311	7311
	380 / 60	263 310	263 360						
55	380 - 415 / 50 460 / 60	263 613	263 713	5111	6111	7111	5311	6311	7311
	380 / 60	263 663	263 783						
60	380 - 415 / 50 460 / 60	263 261	263 271	5111	6111	7111	5311	6311	7311
	380 / 60	263 311	263 361						
67	380 - 415 / 50 460 / 60	263 262	263 272	5111	6111	7111	5311	6311	7311
	380 / 60	263 312	263 362						
75	380 - 415 / 50 460 / 60	263 614	263 714	5111	6111	7111	5311	6311	7311
	380 / 60	263 664	263 784						
83	380 - 415 / 50 460 / 60	263 263	263 273	5111	6111	7111	5311	6311	7311
	380 / 60	263 313	263 363						
93	380 - 415 / 50 460 / 60	263 615	263 715	5111	6111	7111	5311	6311	7311
	380 / 60	263 665	263 785						

P_N [kW]	U_N / f	Model Number Digit 1 – 6		Model Number Digit 7 – 10					
	[V] / [Hz]	DOL	YΔ	WW***	316 SS	904L	PE2/PA**		
							WW***	316 SS	904L
30	500/ 50	263 620	263 790	5111	6111	7111	5311	6311	7311
37	500/ 50	263 621	263 791	5111	6111	7111	5311	6311	7311
45	500/ 50	263 622	263 792	5111	6111	7111	5311	6311	7311
52	500/ 50	263 240	263 340	5111	6111	7111	5311	6311	7311
55	500/ 50	263 623	263 793	5111	6111	7111	5311	6311	7311
60	500/ 50	263 241	263 341	5111	6111	7111	5311	6311	7311
67	500/ 50	263 242	263 342	5111	6111	7111	5311	6311	7311
75	500/ 50	263 624	263 794	5111	6111	7111	5311	6311	7311
83	500/ 50	263 243	263 343	5111	6111	7111	5311	6311	7311
93	500/ 50	263 625	263 795	5111	6111	7111	5311	6311	7311

* VFD operation is only allowed up to 460V supply voltage, for higher voltages please consult Franklin Electric Europa GmbH
** For VFD Operation is PE2/PA mandatory!
*** WW motor - brackets Cast Iron Powder coated

8″ Rewindable Motors - Performance Data 50Hz

P_N [kW]	Thrust F[N]	U_N [V]	n_N [min^{-1}]	I_N [A]	I_A [A]	η (Eff.) [%] at % load			cosφ (PF) at % load			T_N [Nm]	T_A [Nm]
						50	75	100	50	75	100		
30	45 000	380	2880	63	300	83,5	84,4	83,1	0,89	0,88	0,89	99	126
		400	2900	60	318	83,6	85	84,3	0,80	0,86	0,89	99	141
		415	2910	58	332	83,5	85,2	84,9	0,77	0,89	0,88	98	151
		500	2880	48	228	84	84	83	0,84	0,88	0,89		
37	45 000	380	2890	79	378	84,6	85,3	83,9	0,80	0,86	0,88	122	156
		400	2900	76	400	83,9	85,2	84,6	0,74	0,82	0,86	122	176
		415	2910	75	412	82,6	84,5	84,3	0,7	0,80	0,84	121	190
		500	2890	60	287	85	85	84	0,80	0,86	0,88		
45	45 000	380	2900	93	491	85,8	86,4	85,2	0,79	0,86	0,88	149	218
		400	2910	90	520	85,3	86,5	85,9	0,74	0,82	0,86	148	241
		415	2910	89	541	84,5	86,2	85,8	0,69	0,79	0,84	148	263
		500	2905	73	393	85	87	86	0,74	0,82	0,86		
		1000	2910	35	208	85	88	87	0,81	0,87	0,89		
52	45 000	380	2900	107	575	86,5	86,7	85,3	0,81	0,87	0,89	175	284
		400	2910	103	608	86,4	87,1	86,2	0,76	0,84	0,87	175	318
		415	2920	101	633	85,6	87	86,7	0,71	0,80	0,85	174	345
		500	2915	84	437	87	87	85	0,81	0,87	0,85	170	338
55	45 000	380	2900	114	624	86,5	86,9	85,7	0,78	0,85	0,88	182	301
		400	2915	110	660	85,9	87	86,4	0,72	0,82	0,86	181	340
		415	2920	109	688	84,8	86,4	86,2	0,67	0,78	0,83	181	366
		500	2910	88	474	86	87	86	0,78	0,85	0,86		
		1000	2910	45	250	76	87	86	0,76	0,83	0,87	181	301
60	45 000	380	2900	122	698	87,2	87,6	86,5	0,81	0,87	0,89	198	319
		400	2910	116	725	86,8	87,7	87,0	0,77	0,84	0,88	197	357
		415	2920	115	768	86,1	87,4	87,1	0,73	0,82	0,86	197	387
		500	2910	93	530	86	87	86	0,78	0,85	0,88		
		1000	2920	46	300	87	88	87	0,77	0,84	0,88		
67	45 000	380	2900	137	759	87,2	87,6	86,4	0,79	0,86	0,89	220	352
		400	2910	133	797	86,5	87,5	86,9	0,74	0,82	0,86	220	395
		415	2920	131	828	85,6	87	86,6	0,69	0,79	0,84	219	427
		500	2900	104	576	87	88	86	0,79	0,86	0,89	220	392
		1000	2910	52	330	87	88	87	0,74	0,82	0,86		
75	45 000	380	2900	154	892	86,7	87,1	85,9	0,79	0,86	0,89	247	419
		400	2910	148	942	86,2	87,3	86,7	0,74	0,83	0,87	246	472
		415	2920	147	982	85,4	86,9	86,6	0,69	0,79	0,84	245	510
		500	2910	118	678	87	87	86	0,79	0,86	0,86	246	472
		1000	2910	60	377	74	83	87	0,86	0,87	0,87	246	472
83	45 000	380	2910	166	1019	87,8	88,3	87,2	0,81	0,87	0,90	275	483
		400	2920	160	1077	87,5	88,4	87,6	0,77	0,84	0,88	273	544
		415	2925	156	1120	87,2	88,4	88,0	0,73	0,82	0,86	273	586
		500	2915	128	775	88	88	87	0,81	0,87	0,88		
93	45 000	380	2910	188	1186	87,8	88,4	87,5	0,77	0,85	0,88	306	557
		400	2920	183	1276	87,2	88,3	87,8	0,71	0,81	0,86	305	626
		415	2930	184	1308	86,2	87,8	87,7	0,65	0,76	0,83	305	676
		500	2910	144	902	88	88	87	0,77	0,85	0,87		
		1000	2920	73,7	508	87	88	88	0,72	0,80	0,85	304	622

8″ Rewindable Motors - Performance Data 60Hz

P_N [Kw]	P_{max} [Kw]	Thrust F [N]	U_N [V]	n_{max} [min^{-1}]	I_{max} [A]	I_A [A]	η_{max} (Eff.) [%] at % load			$\cos\varphi_{max}$ (Pf.) at % load			T_{max} [Nm]	T_A [Nm
							50	75	100	50	75	100		
30	**34,5**	45 000	380	3500	74	394	82,4	84,6	84,5	0,80	0,86	0,88	99	141
			460	3490	61	324	81,5	83,6	83,5	0,82	0,87	0,89	99	130
37	**42,6**	45 000	380	3510	92	514	83,0	85,2	85,4	0,72	0,81	0,85	122	178
			460	3490	75	407	83,8	85,3	84,8	0,77	0,84	0,87	123	162
45	**51,8**	45 000	380	3500	108	660	83,6	85,7	85,8	0,73	0,81	0,86	149	240
			460	3500	89	524	85,0	86,6	86,3	0,77	0,84	0,87	149	221
52	**59,5**	45 000	380	3510	125	765	85,4	87,0	86,9	0,75	0,83	0,87	175	300
			460	3505	102	606	85,0	86,6	86,2	0,79	0,86	0,88	175	276
55	**63**	45 000	380	3510	132	842	84,4	86,5	86,5	0,71	0,80	0,87	182	321
			460	3510	109	657	85,8	87,1	86,7	0,77	0,84	0,87	181	287
60	**69**	45 000	380	3510	141	931	86,2	87,7	87,7	0,77	0,84	0,87	198	362
			460	3510	116	734	85,4	86,9	86,7	0,80	0,86	0,88	198	332
67	**77**	45 000	380	3520	142	1037	84,4	86,4	86,7	0,73	0,82	0,84	220	396
			460	3510	131	803	85,7	87,2	86,9	0,77	0,85	0,87	220	366
75	**86**	45 000	380	3510	175	1143	86,3	87,8	87,4	0,77	0,85	0,88	247	427
			460	3510	145	947	86,3	87,8	87,4	0,77	0,85	0,88	247	427
83	**95**	45 000	380	3510	191	1377	86,0	88,0	88,0	0,75	0,83	0,89	274	532
			460	3510	158	1090	86,5	87,9	87,7	0,80	0,86	0,89	275	489
93	**107**	45 000	380	3510	218	1586	88,0	88,6	88,4	0,77	0,83	0,87	306	613
			460	3510	180	1256	86,7	88,3	88,3	0,76	0,83	0,87	306	561

Electrical Connection

DOL

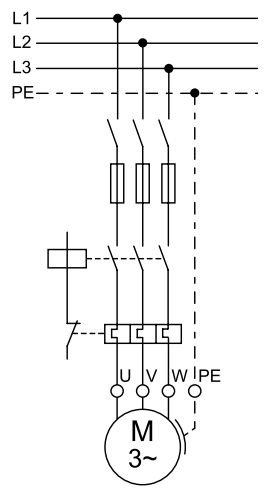

DOL II

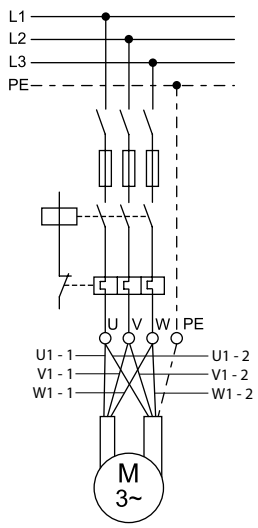

YΔ

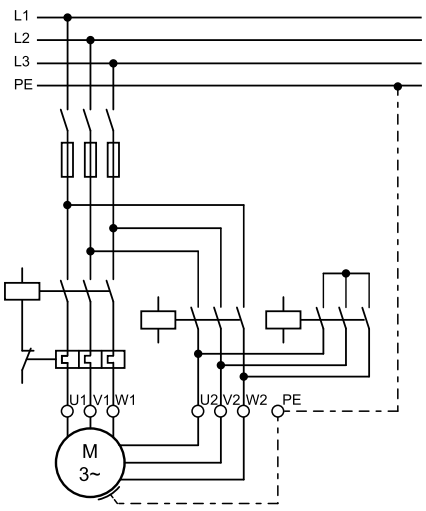

U	V	W	PE
brown	grey	black	yellow/green

8″ Rewindable Motors - Motor Leads

DOL

Lead	P_N [kW]	Ø (mm²)	B / H (mm)		Lengths (m)	Qty.	Lead Mod.- Nr.	Lead seal Kit WW/316 Mod.- Nr.	Lead seal Kit 904L Mod.- Nr.
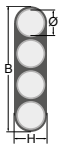	30 – 45	4G10	B	30,0	6	1	308 710 107	308 660 612	308 660 619
			H	10,5					
	52 – 93	4G16	B	38,0	6	1	308 710 108	308 660 618	308 660 620
			H	12,8					
	93 (PE2/PA)	3X25	B	37,5	6	1	308 710 109	308 660 613	308 660 621
			H	16,0					

YΔ

Lead	P_N [kW]	Ø (mm²)	B / H (mm)		Lengths (m)	Qty.	Lead Mod.- Nr.	Lead seal Kit WW/316 Mod.- Nr.	Lead seal Kit 904L Mod.- Nr.
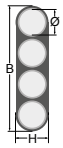 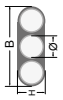	30 – 60	3X6	B	19,5	6	1	308 710 110	308 660 614	308 660 622
			H	9,5					
		4G6	B	25,0		1			
			H	9,0					
	65 – 83	3X10	B	24,5	6	1	308 710 111	308 660 615	308 660 623
			H	11,5					
		4G10	B	30,0		1			
			H	10,5					
	93	3X16	B	30,3	6	1	308 710 112	308 660 616	308 660 624
			H	13,2					
		4G16	B	38,0		1			
			H	12,8					

For PE2/PA motors additionally the special Tape 700 541 688 is absolutely necessary

Ground lead* (optional)	P_N [kW]	Ø (mm²)	D (mm)	Lengths (m)	Qty.	Mod.-Nr.
	**all ratings**	1G25	13,0	8	1	308 053 080

*only for WW and 316SS Motors

Lead opening seal kit	30 – 93 kW DOL / YΔ	Mod.- Nr.:	WW/316	308 660 617
			904L	308 660 625

Cables are designed for submerged operation. For air operation please consult Franklin Electric.

8" Rewindable De-Rating Curves

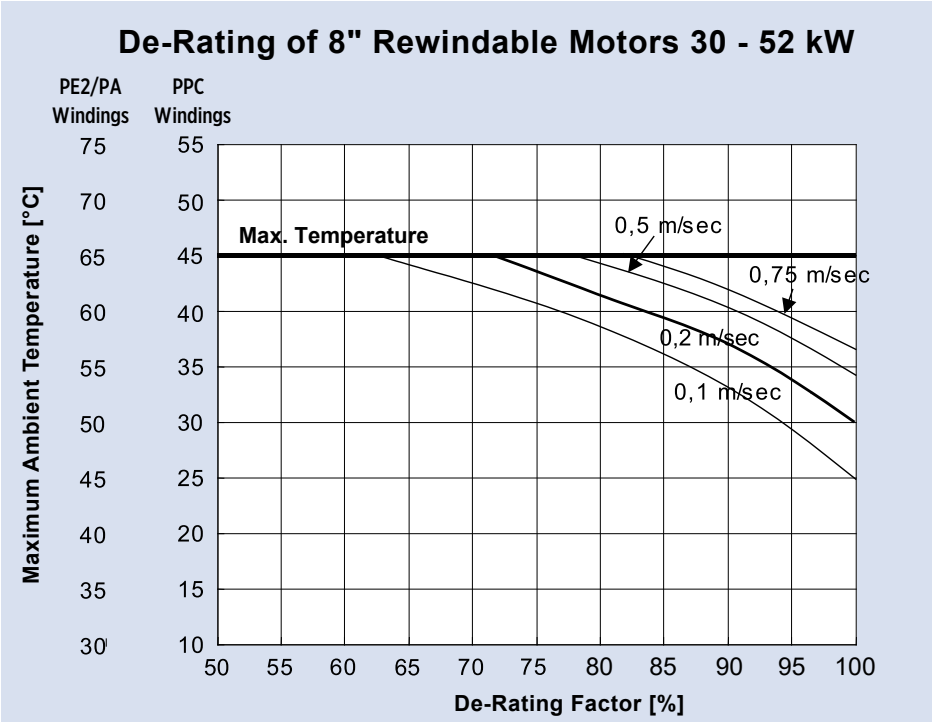

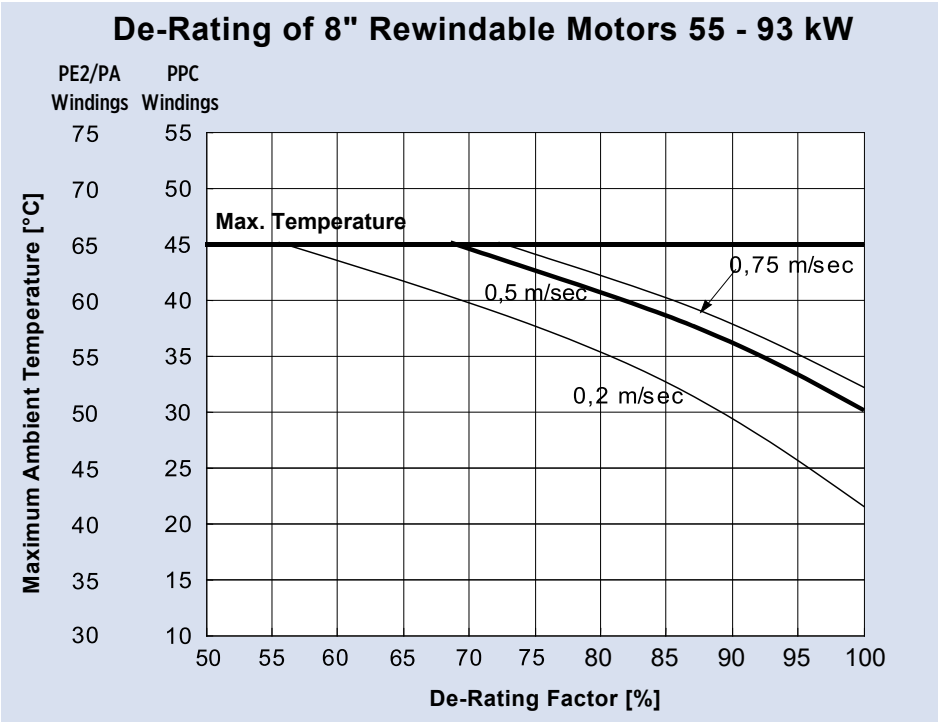

If these conditions are not met please contact Franklin Electric !

PPC Insulation Windings (380 – 415 V / 50 Hz)

P_N [kW]	Mod.-No. Winding kits	Turns per coil	Wire diameter [mm]	Type of Isolation	Group connection	Total Wire length [m]	Resistance coil [Ω]	Resistance YD (U1-U2) [Ω]	Resistance Dol (U1-V1) [Ω]
30	326 349 999	9+10+9+10	2,2 / 3,1	PPC	Series	450,00	0,2640	0,5400	0,3700
37	326 101 999	17+17+17+17	1,6 / 2,4	PPC	Parallel	630,00	0,8930	0,4750	0,3110
45	326 110 999	14+14+14+14	1,8 / 2,6	PPC	Parallel	582,48	0,6545	0,3480	0,2350
52	326 120 999	12+12+12+12	1,9 / 2,7	PPC	Parallel	655,00	0,5695	0,3130	0,1900
55	326 119 999	11+12+11+12	2,0 / 2,9	PPC	Parallel	542,40	0,4925	0,2720	0,1730
60	326 129 999	10+10+10+10	2,2 / 3,1	PPC	Parallel	536,40	0,4024	0,2170	0,1430
67	326 128 999	9+10+9+10	2,2 / 3,1	PPC	Parallel	510,48	0,3823	0,2090	0,1390
75	326 135 999	8+9+8+9	1,6 / 2,4 2DR.II	PPC	Parallel	990,72	0,3503	0,1930	0,1240
83	326 142 999	7+8+7+8	1,7 / 2,5 2DR.II	PPC	Parallel	1008,00	0,3159	0,1670	0,1053
93	326 141 999	7+7+7+7	1,8 / 2,6 2DR.II	PPC	Parallel	943,20	0,2630	0,1400	0,0940

PE2/PA Insulation Windings (380 – 415 V / 50 Hz)

P_N [kW]	Mod.-No. Winding kits	Turns per coil	Wire diameter [mm]	Type of Isolation	Group connection	Total Wire length [m]	Resistance coil [Ω]	Resistance YD (U1-U2) [Ω]	Resistance Dol (U1-V1) [Ω]
30	326 514 999	9+10+9+10	2,0 / 3,1	PE2/PA	Series	360	0,3212	0,6424	0,4282
37	326 239 999	8+9+8+9	2,0 / 3,1	PE2/PA	Series	315	0,2874	0,5748	0,3832
45	326 248 999	14+14+14+14	1,6 / 2,6	PE2/PA	Parallel	582	0,8283	0,4141	0,2761
52	326 259 999	12+12+12+12	1,7 / 2,7	PE2/PA	Parallel	565	0,7113	0,3556	0,2371
55	326 258 999	11+12+11+12	1,9 / 2,9	PE2/PA	Parallel	542	0,5457	0,2728	0,1819
60	326 269 999	10+10+10+10	2,0 / 3,1	PE2/PA	Parallel	536	0,4868	0,2434	0,1622
67	326 268 999	9+10+9+10	2,0 / 3,1	PE2/PA	Parallel	510	0,4625	0,2312	0,1541
75	326 275 999	8+9+8+9	2,0 / 3,1	PE2/PA	Parallel	495	0,4483	0,2241	0,1494
83	326 283 999	7+8+7+8	1,5 / 2,5 2DR.II	PE2/PA	Parallel	1008	0,4057	0,2028	0,1352
93	326 282 999	7+7+7+7	1,6 / 2,6 2DR.II	PE2/PA	Parallel	943	0,3328	0,1664	0,1109

PE2/PA Insulation Windings (500 V / 50 Hz)

P_N [kW]	Mod.-No. Winding kits	Turns per coil	Wire diameter [mm]	Type of Isolation	Group connection	Total Wire length [m]	Resistance coil [Ω]
37	326 240 999	10+11+10+11	1,9 / 2,7 / 2,9	PE2/PA	Series	387	0,3934
45	326 250 999	9+9+9+9	2,0 / 2,9 / 3,1	PE2/PA	Series	371	0,3408
55	326 260 999	14+15+14+15	1,6 / 2,4 / 2,6	PE2/PA	Parallel	679	0,9703
67	326 270 999	12+12+12+12	1,7 / 2,5 / 2,7	PE2/PA	Parallel	640	0,8087
75	326 277 999	10+11+10+11	1,9 / 2,7 / 2,9	PE2/PA	Parallel	607	0,6137
93	326 284 999	9+9+9+9	2,0 / 2,9 / 3,1	PE2/PA	Parallel	601	0,5478

PE2/PA Insulation Windings (380 V / 60 Hz)

P_N [kW]	Mod.-No. Winding kits	Turns per coil	Wire diameter [mm]	Type of Isolation	Group connection	Total Wire length [m]	Resistance coil [Ω]
37	326 237 999	13+14+13+14	1,7 / 2,5 / 2,7	PE2/PA	Parallel	504	0,6318
45	326 246 999	11+11+11+11	1,9 / 2,7 / 2,9	PE2/PA	Parallel	461	0,4616
52	326 585 999	9+10+9+10	2,0 / 2,9 / 3,1	PE2/PA	Parallel	451	0,4125
55	326 256 999	9+9+9+9	2,0 / 2,9 / 3,1	PE2/PA	Parallel	428	0,3855
60	326 586 999	8+8+8+8	1,5 / 2,3 / 2,5	PE2/PA	Parallel	865	0,3473
67	326 266 999	7+8+7+8	1,5 / 2,3 / 2,5	PE2/PA	Parallel	813	0,3246
75	326 273 999	6+7+6+7	1,7 / 2,5 / 2,7	PE2/PA	Parallel	766	0,2373
83	327 153 999	6+6+6+6	1,8 / 2,6 / 2,8	PE2/PA	Parallel	994	0,2240
93	326 280 999	5+6+5+6	1,9 / 2,7 / 2,9	PE2/PA	Parallel	748	0,1854

Insulation resistance (20°C / 500 VDC)

New motor without drop cable	400 >	MΩ
Used motor without drop cable	20 >	MΩ
New motor with drop cable	4 >	MΩ
Used motor with drop cable	1	MΩ

8" Rewindable Spare Parts

Kit 1 Thrust Bearing Kit	WW/316SS/ 904L	Incl.Pos.: 17; 20; 21; 32; 33	308 750 601
Kit 2 Radial Bearing Kit	WW/316SS/ 904L	Incl.Pos.: 15; 34	308 751 601
Kit 3 Seal Kit	WW/316SS	Incl.Pos.: 1 - 4; 11; 17; 25	308 800 603
	904L		308 800 604
Kit 4 Up-Thrust Bearing Kit	WW/316SS/ 904L	Incl.Pos.: 18	308 751 602
Kit 5 Screw Kit	WW/316SS	Incl.Pos.: 2.0; 5; 8; 13; 24; 37; 40	308 660 601
	904L		308 660 602
Kit 6 Lead Seal Kit	WW/316SS/ 904L	Incl.Pos.: 5; 6; 7	see page 148
Kit 7 PT100 Kit	WW/316SS/ 904L	Incl.Pos.: 9	see page 202
Kit 8 Valve Kit	WW	Incl.Pos.: 10; 11; 39	308 800 414

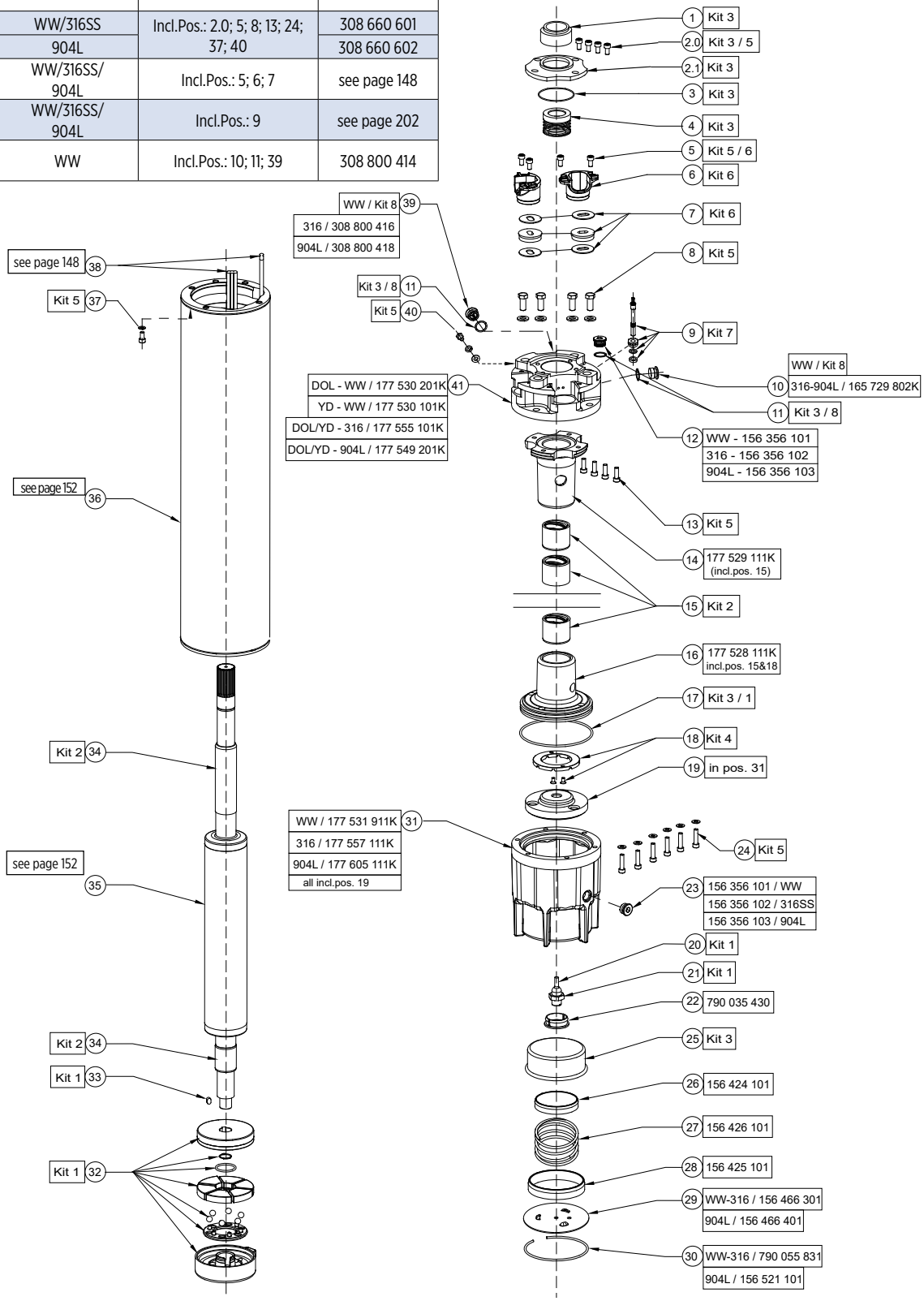

WW / 316SS Stator and Rotor Model Number (380 - 415/ 460 Volts - 50 / 60Hz)

P_N [kW]	Stator (incl. winding and 6m motor lead)				Rotor
	DOL PPC	DOL PE2/PA	YΔ PPC	YΔ PE2/PA	
30	326 349 931	326 514 931	326 349 981	326 514 981	161 580 801K
37	326 101 931	326 239 931	326 101 981	326 239 981	161 580 801K
45	326 110 931	326 248 931	326 110 981	326 248 981	161 580 802K
52	326 120 931	326 259 931	326 120 981	326 259 981	161 580 803K
55	326 119 931	326 258 931	326 119 981	326 258 981	161 580 803K
60	326 129 931	326 269 931	326 129 981	326 269 981	161 580 804K
67	326 128 931	326 268 931	326 128 981	326 268 981	161 580 804K
75	326 135 931	326 275 931	326 135 981	326 275 981	161 580 805K
83	326 142 931	326 283 931	326 142 981	326 283 981	161 580 806K
93	326 141 931	326 282 931	326 141 981	326 282 981	161 580 806K

904L Stator and Rotor Model Number (380 - 415/ 460 Volts - 50 / 60Hz)

P_N [kW]	Stator (incl. winding and 6m motor lead)				Rotor
	DOL PPC	DOL PE2/PA	YΔ PPC	YΔ PE2/PA	
30	326 349 921	326 514 921	326 349 971	326 514 971	161 580 811K
37	326 101 921	326 239 921	326 101 971	326 239 971	161 580 811K
45	326 110 921	326 248 921	326 110 971	326 248 971	161 580 812K
52	326 120 921	326 259 921	326 120 971	326 259 971	161 580 813K
55	326 119 921	326 258 921	326 119 971	326 258 971	161 580 813K
60	326 129 921	326 269 921	326 129 971	326 269 971	161 580 814K
67	326 128 921	326 268 921	326 128 971	326 268 971	161 580 814K
75	326 135 921	326 275 921	326 135 971	326 275 971	161 580 815K
83	326 142 921	326 283 921	326 142 971	326 283 971	161 580 816K
93	326 141 921	326 282 921	326 141 971	326 282 971	161 580 816K

Design 8" Rewindable Motors

Motor s - WW / 316SS / 904L

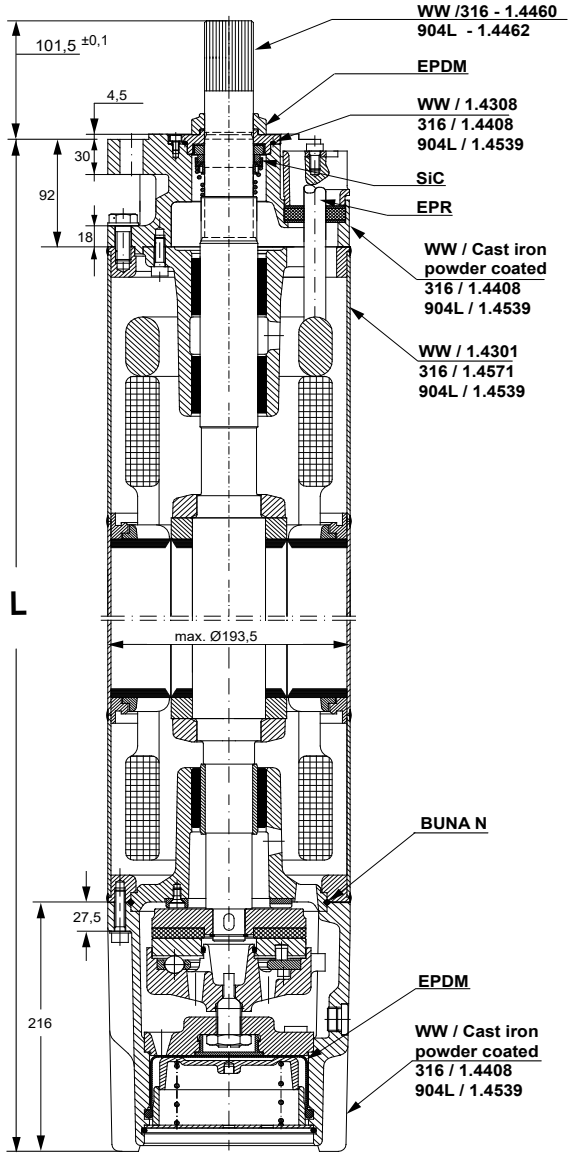

End bell upper

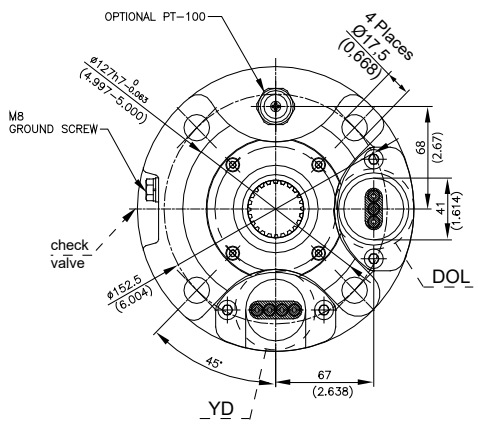

Motor Box

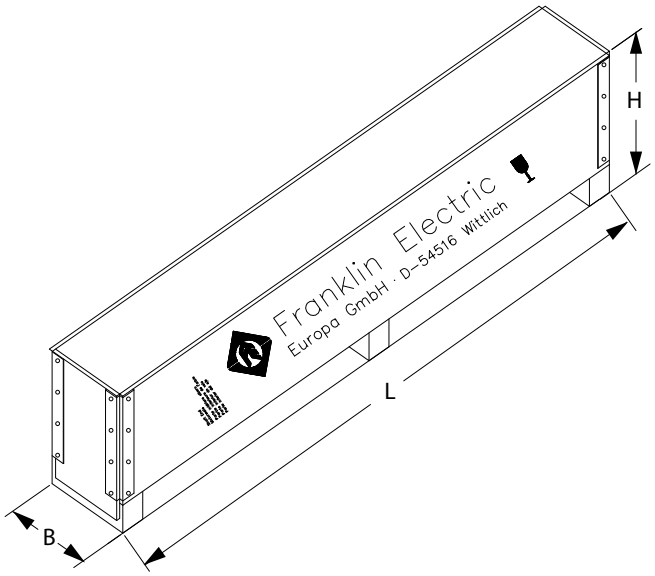

(Beispiel)

P_N [kW]	Motor lenght L [mm]	Weights [kg]		Motor Shipping Size [mm]		
		Motor [kg]	incl. Motor Box [kg]	B	H	L
30	1140	140	169	301	448	1596
37	1140	140	169			
45	1230	156	185			
52	1340	179	208			
55	1340	179	208			
60	1470	198	235	301	448	1996
67	1470	198	235			
75	1560	215	252			
83	1740	247	284			
93	1740	247	284			

8″ REWINDABLE PERMANENT MAGNET MOTOR

WATER WELL WW CI PC / 304SS | STAINLESS STEEL 316 | STAINLESS STEEL 904L

SAND FIGHTER

BENEFITS & FEATURES

- Motors for operation with Variable frequency drive (VFD)
- 8″ double flange NEMA mounting design
- High efficiency electrical design for low operation costs
- SandFighter™ sealing system with SIC mechanical seal and sand slinger
- Factory filled with Franklin's FES93 motor fill solution
- Drinking water approvals
- Stainless steel splined shaft
- Liquid lubricated radial bearings and High capacity Kingsbury type 45 kN thrust bearing for 100 % maintenance free operation
- Pressure-equalizing diaphragm, spring pre-loaded

STANDARD SPECIFICATION

- Ratings: 75 / 100 / 130 kW (100 Hz - 3000 rpm, 120 Hz - 3600 rpm)
- Max. storage temperature - 15 °C to + 60 °C
- Standard motor with PE2/PA winding insulation
- Nominal ambient temperature: 30 °C with 0.5 m/s cooling flow
- System Supply Voltage: 400 V (100 Hz) / 460 V (120 Hz)
- Voltage Tolerance: ± 10 % U_N
- Protection IP68
- Standard Motor: WW- Water well Design (Stator 304SS / Castings - CI Powder coated)
- Motor protection: DIN 61947-4-1
- Frequency of starts: 10 starts/ hour (with min. 3 minutes resting time), equally distributed
- DOL-start
- All motors with factory installed leads, motor lead length: 6 m
- Motors installation orientation: Vertical / horizontal (shaft end heightened)
- Rotation counter clock wise facing shaft end (rotation reversible)

OPTIONS

- Higher-graded materials: 316SS, 904L
- Special voltages
- Retrofitable PT 100 temperature sensor (VFD PT100 Plug-in card necessary, order no. 308 170 202)
- Special lead lengths

3~ DOL MODEL NUMBERS 400 V / 100 HZ**

P_N [kW]	400V / 100 Hz WW * Motor model number	400V / 100 Hz 316SS Motor model number	400V / 100 Hz 904L Motor model number
75	263 014 5311	263 014 6311	263 014 7311
100	263 016 5311	263 016 6311	263 016 7311
130	263 018 5311	263 018 6311	263 018 7311

* WW (Water well)- Stator 304SS / Castings - CI Powder coated (see page material description in the catalog)
** PM motors are to be operated by Variable frequency drive (VFD)

8" REWINDABLE PERMANENT MAGNET MOTOR

EFFICIENCY CURVE AT 3000 RPM

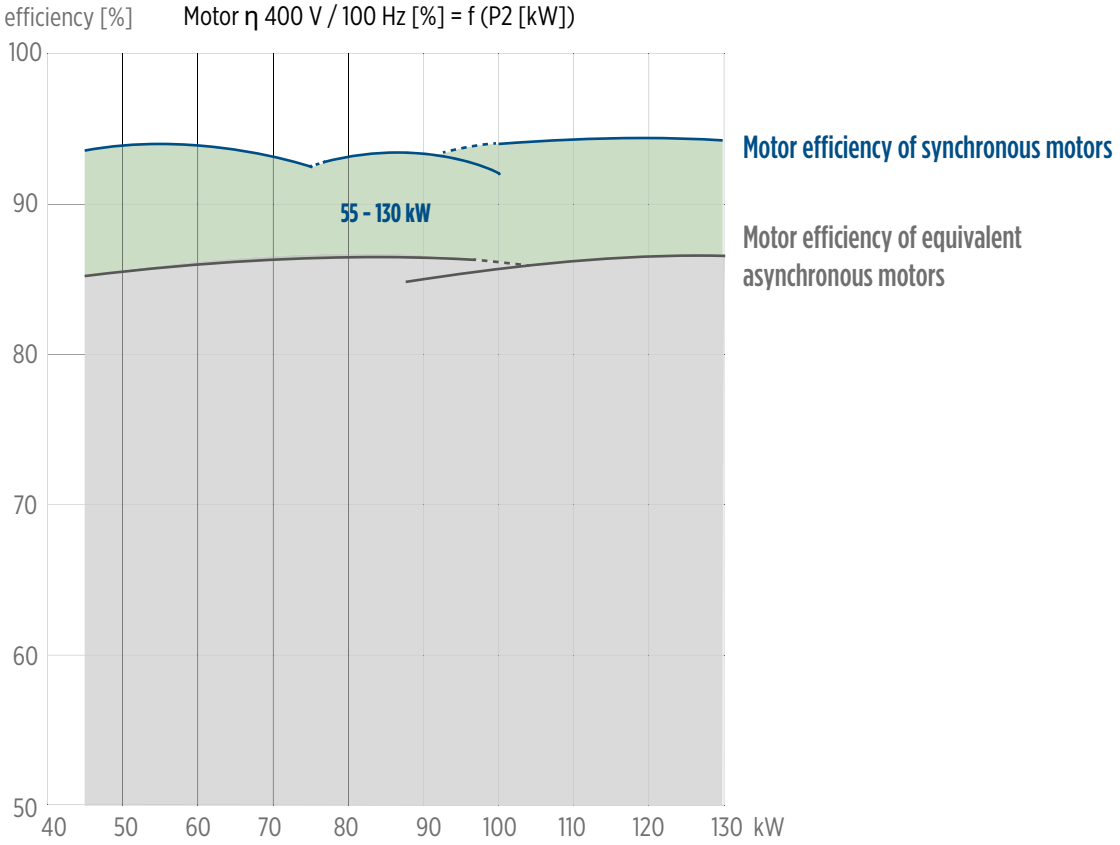

MOTOR PERFORMANCE DATA 400 V / 100 HZ

motor model no.	P_N [kW]	Thrust F [kN]	n_N [min⁻¹]	I_N [A]	I_A/I_N* [A]	η [%]	cos phi	T_N [Nm]	T_A/T_N* [Nm]
263 014 xxxx	45	45	3000	74	1	93.3	0.96	143	1
	55	45	3000	91	1	93.3	0.96	175	1
	67	45	3000	112	1	93.0	0.96	213	1
	75	45	3000	128	1	92.5	0.96	239	1
263 016 xxxx	75	45	3000	129	1	93.5	0.95	239	1
	83	45	3000	143	1	93.3	0.95	264	1
	93	45	3000	162	1	93.0	0.95	296	1
	100	45	3000	178	1	92.7	0.95	319	1
263 018 xxxx	75	45	3000	125	1	93.8	0.97	239	1
	93	45	3000	153	1	93.7	0.97	296	1
	110	45	3000	186	1	93.3	0.97	350	1
	130	45	3000	225	1	92.6	0.96	414	1

Performance data are based on measurements with Franklin Electric original equipment.
*Since this is an integrated system (motor plus electronics) these figures relate to VFD input.

8" REWINDABLE PERMANENT MAGNET MOTOR

MOTOR PERFORMANCE DATA 500 V / 100 HZ

motor model no.	P_N [kW]	Thrust F [kN]	n_N [min^{-1}]	I_N [A]	I_A/I_N* [A]	η [%]	cos phi	T_N [Nm]	T_A/T_N* [Nm]
263 024 xxxx	45	45	3000	60	1	93.2	0.95	143	1
	55	45	3000	74	1	93.2	0.95	175	1
	67	45	3000	91	1	93.0	0.95	213	1
	75	45	3000	103	1	92.5	0.95	239	1
263 026 xxxx	75	45	3000	105	1	93.5	0.94	239	1
	83	45	3000	116	1	93.3	0.94	264	1
	93	45	3000	131	1	93.2	0.94	296	1
	100	45	3000	143	1	92.9	0.94	319	1
263 028 xxxx	75	45	3000	102	1	93.8	0.96	239	1
	93	45	3000	124	1	93.7	0.96	296	1
	110	45	3000	151	1	93.3	0.96	350	1
	130	45	3000	183	1	92.6	0.96	414	1

Performance data are based on measurements with Franklin Electric original equipment.
*Since this is an integrated system (motor plus electronics) these figures relate to VFD input.

MOTOR LEADS 400 V* DOL

lead	kW	Ø [mm^2]	B / H [mm]		length [m]	Qty.	lead model no.	lead seal kit WW/316 model no.	Lead seal kit 904L model no.
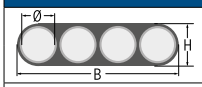	75	4G16	B	38,0	6	1	308 710 108	308 660 618	308 660 620
			H	12,8					
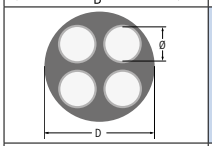	100	4G25	D	32	6	1	308 710 140	308 660 633	308 660 634
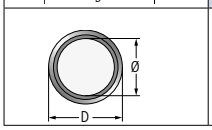	130	3RD 1X35 + Ground lead 1x35	D	15,3	6	1	308 710 151	308 660 641	308 660 642

Lead opening seal kit		qty.	model no.
8" Rew	WW / 316SS	1	308 660 617
	904L	1	308 660 625

Leads are designed for submerged operation. For air operation please consult Franklin Electric.

8″ REWINDABLE PERMANENT MAGNET MOTOR

MOTOR DROP LEADS 400 V / 100 HZ - 460 V / 120 HZ

P_N [kW]	cable size [mm²], copper wire - 90 °C rated insulation											
	16	25	35	50	70	95	120	150	185	240	300	400
45	65	100	140	200	280	370	460					
55		85	120	170	230	300	370	450				
67			90	130	180	240	300	360	420			
75			80	115	160	200	260	310	370	460		
83				100	140	190	235	285	340	420		
93					115	160	200	240	290	350	410	
110					100	140	170	210	250	305	360	440
130						115	145	175	210	260	305	370

For lead lenghts > 120 m please consult Franklin Electric.
Further potential energy savings due to more conservative lead sizing (< 3 % voltage drop) at 50 °C ambient.

ELECTRICAL CONNECTIONS DOL

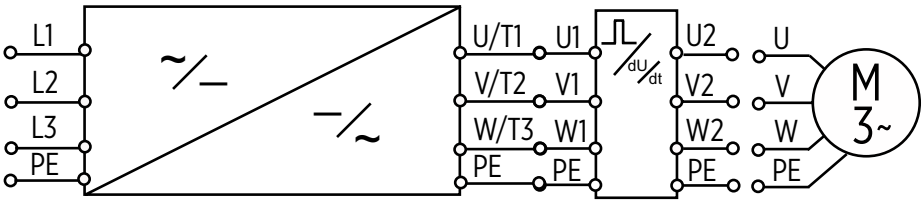

U	V	W	PE
brown	grey	black	yellow/green

8" REWINDABLE PERMANENT MAGNET MOTOR

MOTOR DIMENSIONS AND MATERIALS

motor - WW / 316SS / 904L

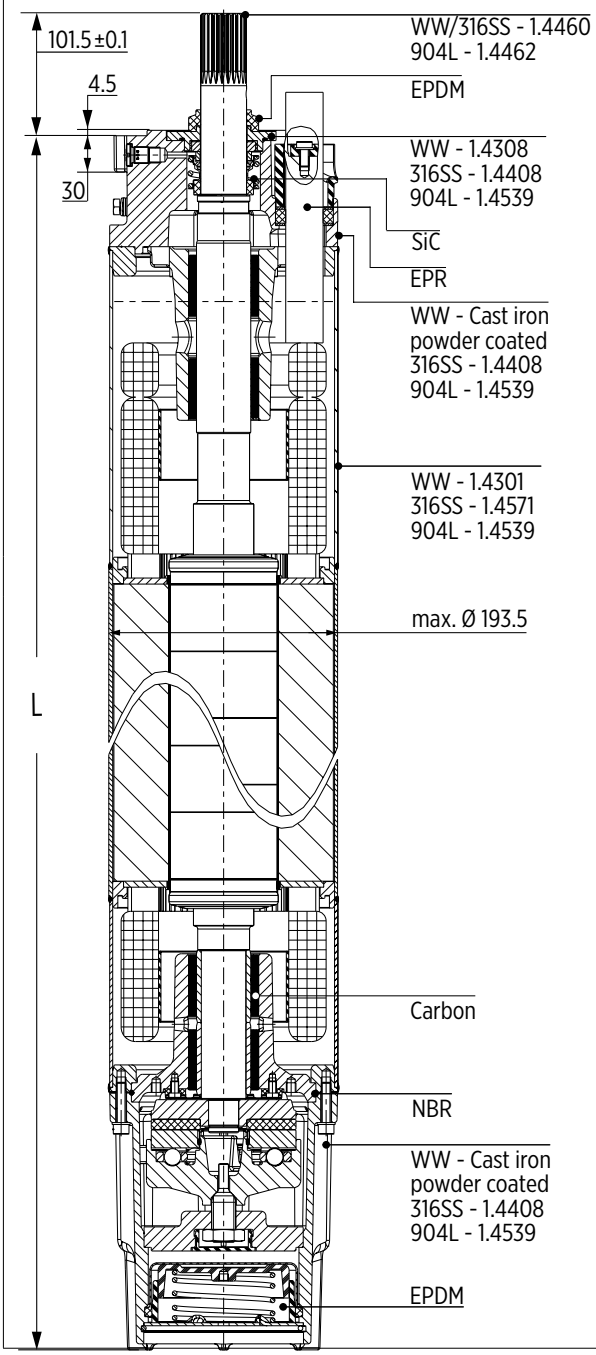

end bell

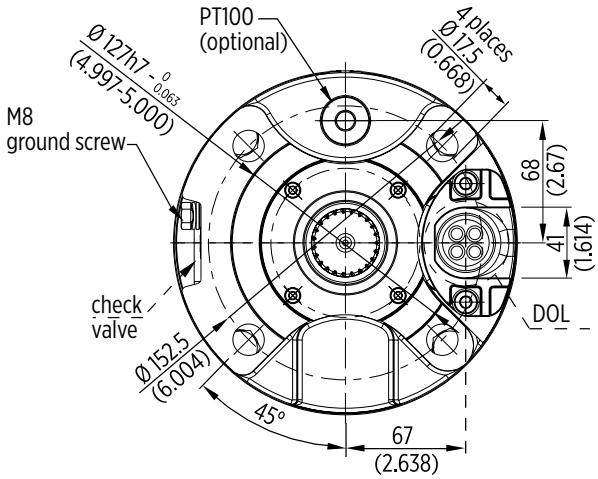

motor box

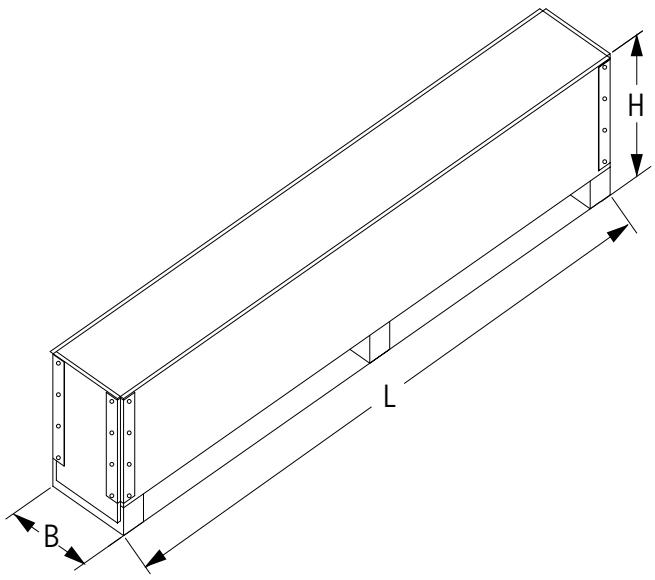

(sample drawing)

MOTOR WEIGHTS 304SS / 316SS / 904L

P [kW]	motor lenghts L [mm]	motor weights [kg]		motor shipping size [mm]		
		without packaging	incl. packaging	B	H	L
75	1205	150	179	301	448	1596
100	1316	169	198			1596
130	1482	205	237			1996

SPARE PARTS 8" REWINDABLE PERMANENT MAGNET MOTOR

Kit	Kit description	materials	incl. positions	order no.
1	Thrust bearing kit	WW / 316SS / 904L	17, 20, 21, 32, 33	308 750 601
2	Radial bearing kit	WW / 316SS / 904L	15	308 751 603
3	seal kit	WW / 316SS	1-4, 11, 17, 25	308 800 603
		904L		308 800 604
4	Up-thrust bearing kit	WW / 316SS / 904L	18	308 751 602
5	Screw kit	WW / 316SS	2.0, 5, 8, 13, 24, 37, 40	308 660 601
		904L		308 660 602
6	Lead seal kit	WW / 316SS / 904L	5, 6, 7	➡ page 156
7	PT100 kit	WW / 316SS / 904L	9	➡ page 202
8	Valve Kit	WW	10, 11, 39	308 800 414

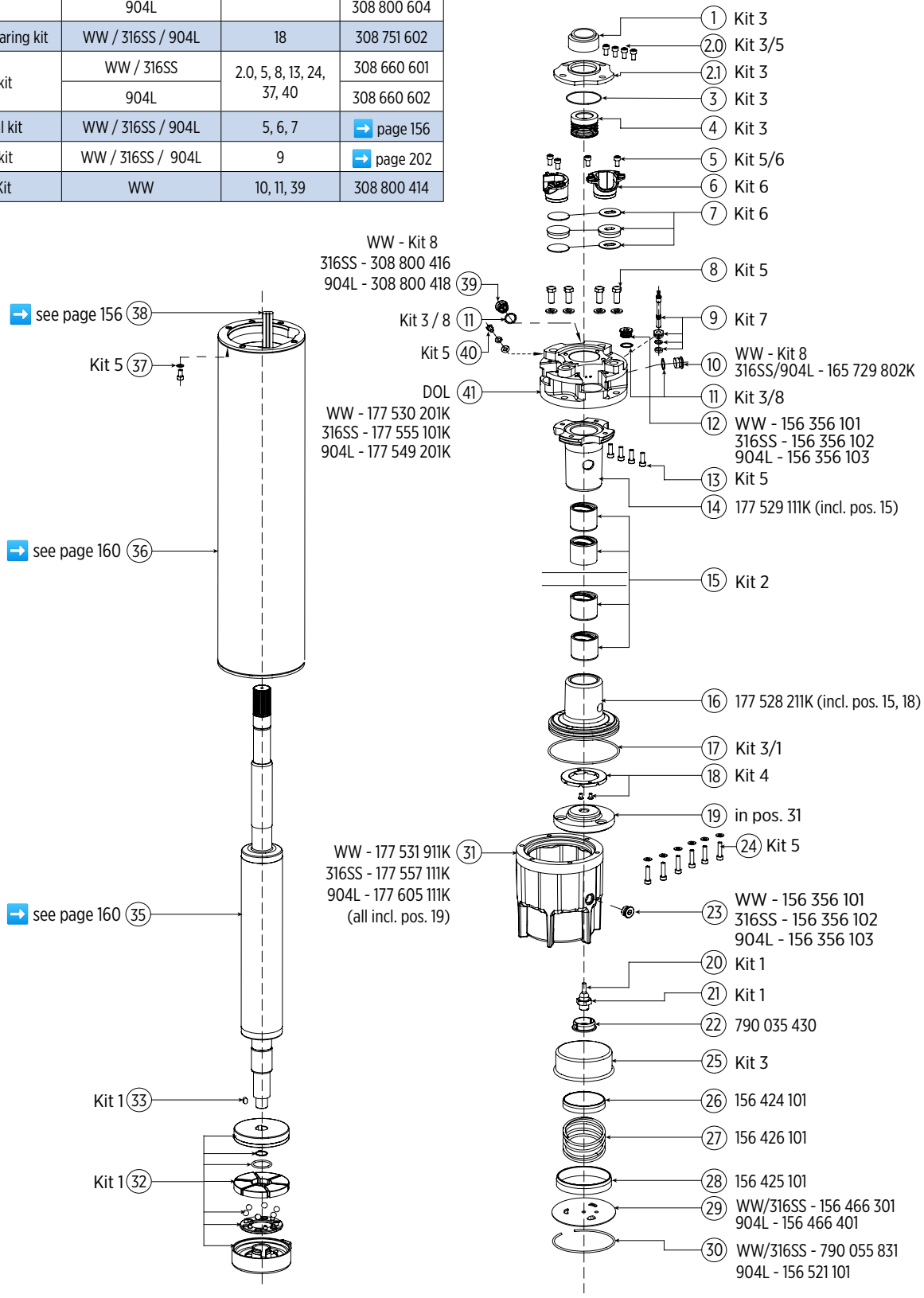

SPARE PARTS 8" REWINDABLE PERMANENT MAGNET MOTOR

STATOR AND ROTOR MODEL NUMBERS WW / 316 SS - 400 V / 100 HZ

P [kW]	Stator (incl. windings and 6 m motor lead)			rotor	
	U_N [V]	DOL [PE2/PA]			
		motors starting 08/2017	motors up to 07/2017	motors starting 08/2017	motors up to 07/2017
75	400 V	327 154 702K	327 154 901K	161 123 811K	161 123 801K
100	400 V	327 155 702K	327 155 901K	161 123 812K	161 123 802K
130	400 V	327 156 701K	-	161 123 814K	-

WINDING SPECIFICATION

P [kW]	U_N [V]	Model no. winding kit	Turns per coil	Wire diameter Ø [mm]	Type of Isolation	Group connection	Total wire length [m]	Resistance coil [Ω]	Resistance DOL (U1-V1) [Ω]
75	400	327 154 999	16	1.9/2.1 & 1.8/2.8 (2GR II)	PE2/PA	Parallel Y	290	0.146	0.167
	500	327 151 999	20	2.3/3.5 (2GR II)			350	0.235	0.235
100	400	327 155 999	12	2.0/3.1 & 2.1./3.3 (2GR II)	PE2/PA	Parallel Y	260	0.103	0.167
	500	327 144 999	17	2.5/3.8 (2GR II)			350	0.213	0.213
130	400	327 156 999	20	2.3/3.2/3.5 (4GR II)	PE2/PA	Parallel Y	486	0.115	0.121
	500								

INSULATION RESISTANCE (20 °C / 500 VDC)

New motor without drop cable	400 >	MΩ
Used motor without drop cable	20 >	MΩ
New motor with drop cable	4 >	MΩ
Used motor with drop cable	1	MΩ

MOTOR REPAIR INSTRUCTIONS

- Pictured repair instructions WW / 316SS / 904L (model no. 308 018 697)

10″ REWINDABLE MOTOR

Rewindable motors with best class winding wires

SAND FIGHTER | WATER WELL WW CI PC / 304SS | OPTIONAL STAINLESS STEEL 316 | OPTIONAL STAINLESS STEEL 904L

FEATURES & BENEFITS

- 10″ double flange mounting design
- Factory filled with Franklin's FES93 motor fill solution
- VFD operation is possible up to a supply voltage of 460V and with PE2/PA (in compliance with the application guidelines in the motor operating instructions and the VFD manufacturer). For VFD operation with higher voltages, please consult Franklin Electric.
- High capacity Kingsbury type liquid lubricated 60 kN thrust bearing and radial bearings for 100 % maintenance free operation
- Pressure-equalizing diaphragm, spring pre-loaded
- Stainless Steel keyed shaft
- SandFighter™ sealing system with SIC mechanical seal and sand slinger is standard
- High efficiency electrical design for low operation costs
- Standard Motor: WW- Water well Design (Stator 304SS / Castings - CI Powder coated)
- Drinking water approvals

STANDARD SPECIFICATION

- Ratings: 85 - 185 kW
- Max. storage temperature - 15 °C to + 60 °C
- Standard motor with PPC winding insulation
- Nominal ambient temperature: 25 °C with 0.5 m/s cooling flow
- Standard Voltage: 380 - 415 V (50 Hz), 460 V (60 Hz)
- Voltage Tolerance: 50 Hz: 380-415 V - 10 % / + 6 % U_N [380 - 415 V = (380 - 10%) – (415 + 6 %)]; 60 Hz: 460V / ± 10 % U_N,
- Protection IP68
- Motor protection: DIN 61947-4-1
- Frequency of starts: 10 starts/ hour (with min. 3 minutes resting time), equally distributed
- DOL / YΔ - start (pos. of cables 90 °)
- Motor lead length: 6 m
- Installation orientation: Vertical / horizontal (shaft end heightened)
- Rotation counter clock wise facing shaft end (Rotation reversible)
- All motors with factory installed leads

OPTIONS

- Higher-graded materials: 316SS and 904L
- Special voltages
- Retrofitable PT 100 temperature sensor
- PE2/PA winding insulation for max. ambient temperature of 45 °C (Standard cooling flows)
- Special lead lengths on request

High Efficiency System Paket

SYSTEM PACKAGE

- NEMA Synchron motors
- Frequency converter
- matchet output filter

▶ 10″ High Efficiency System

10" Rewindable Motors - Model Numbers 50/60Hz *

P_N [kW]	U_N / f	Model Numbers Digit 1 – 6		Model Numbers Digit 7 – 10					
	[V] / [Hz]	DOL	YΔ	WW***	316 SS	904L	PE2/PA**		
							WW***	316 SS	904L
85	380 - 415 / 50 460 / 60	264 131	264 231	5111	6111	7111	5311	6311	7311
	380 / 60	264 661	264 761						
110	380 - 415 / 50 460 / 60	264 133	264 233	5111	6111	7111	5311	6311	7311
	380 / 60	264 663	264 763						
130	380 - 415 / 50 460 / 60	264 134	264 234	5111	6111	7111	5311	6311	7311
	380 / 60	264 664	264 764						
150	380 - 415 / 50 460 / 60	264 135	264 235	5111	6111	7111	5311	6311	7311
	380 / 60	264 665	264 765						
185	380 - 415 / 50 460 / 60	264 136	264 236	5111	6111	7111	5311	6311	7311
	380 / 60		264 766						

* VFD operation is only allowed up to 460V supply voltage, for higher voltages please consult Franklin Electric Europa GmbH
** For VFD Operation is PE2/PA mandatory!
*** WW motor - brackets Cast Iron Powder coated

10" Rewindable Motors - Performance Data 50Hz

P_N [kW]	Thrust F [N]	U_N [V]	n_N [min-1]	I_N [A]	$I_{A.}$ [A]	η (Eff.) [%] at % load			cos φ (PF) at % load			T_N [Nm]	T_A [Nm]
						50	75	100	50	75	100		
85	60 000	380	2890	179	783	85	86	85	0,78	0,85	0,87	281	282
		400	2900	174	828	83	85	85	0,72	0,81	0,85	280	316
		415	2910	171	863	83	85	85	0,68	0,78	0,83	279	342
		500	2890	136	595	84	85	84	0,78	0,84	0,87	281	282
		525	2900	133	631	83	85	85	0,72	0,81	0,85	280	316
		1000	2900	68	331	83	85	85	0,72	0,81	0,85	280	316
110	60 000	380	2910	235	1095	86	87	86	0,72	0,81	0,85	361	418
		400	2920	232	1158	84	86	86	0,65	0,76	0,82	360	467
		415	2920	233	1206	83	85	86	0,59	0,71	0,79	360	507
		500	2910	180	875	86	87	86	0,69	0,79	0,83	360	432
		525	2920	179	923	85	86	86	0,62	0,73	0,80	359	482
		1000	2920	89	463	84	86	86	0,65	0,76	0,82	360	467
130	60 000	380	2900	266	1271	88	88	87	0,79	0,85	0,87	428	487
		400	2920	256	1344	87	88	88	0,74	0,82	0,86	425	546
		415	2920	255	1400	87	88	87	0,69	0,78	0,83	425	592
		500	2900	202	966	87	88	87	0,79	0,85	0,87	428	487
		525	2920	195	1024	87	88	87	0,73	0,81	0,85	425	546
		1000	2910	104	523	87	88	87	0,76	0,83	0,86	426	516
150	60 000	380	2910	307	1502	87	87	86	0,79	0,85	0,88	492	568
		400	2920	298	1590	86	88	87	0,73	0,81	0,85	491	635
		415	2930	296	1655	86	87	87	0,67	0,77	0,83	489	689
		500	2910	233	1142	87	87	86	0,79	0,85	0,88	492	568
		525	2920	227	1211	86	87	87	0,73	0,81	0,85	491	635
		1000	2920	117	636	86	88	87	0,73	0,81	0,85	491	635
185	60 000	380	2900	390	2030	87	88	87	0,72	0,81	0,85	609	913
		400	2920	384	2148	86	88	88	0,64	0,75	0,81	605	1022
		415	2920	389	2237	84	86	86	0,57	0,70	0,79	605	1109
		500	2900	294	1500	87	88	87	0,72	0,81	0,85	610	888
		525	2910	289	1580	86	87	87	0,65	0,76	0,82	607	988
		1000	2900	148	859	87	88	87	0,72	0,81	0,85	609	913

10" Rewindable Motors - Performance Data 60Hz

P_N [kW]	P_{max} [kW]	Thrust F [N]	U_N [V]	n_N [min-1]	I_{max} [A]	I_A [A]	η_{max} (Eff.) [%] at % load			cos φ_{max} (PF) at % load			T_{max} [Nm]	T_A [Nm]
							50	75	100	50	75	100		
85	**98**	60 000	460	3500	172	803	83	85	85	0,76	0,83	0,86	267	281
			380	3510	216	1120	82	84	85	0,69	0,78	0,83	267	325
110	**127**	60 000	460	3510	225	1160	84	86	86	0,71	0,80	0,84	345	375
			380	3510	273	1430	84	86	86	0,70	0,79	0,84	346	382
130	**149**	60 000	460	3510	254	1308	86	87	87	0,77	0,84	0,87	408	437
			380	3510	309	1710	85	87	86	0,73	0,82	0,86	408	474
150	**173**	60 000	460	3510	294	1557	85	87	87	0,77	0,84	0,87	469	508
			380	3510	362	1980	85	87	87	0,75	0,83	0,86	468	535
185	**213**	60 000	460	3510	377	2130	85	87	87	0,70	0,79	0,84	585	858
			380	3510	448	2690	84	87	87	0,66	0,77	0,87	583	896

10" Rewindable De-Rating Curves

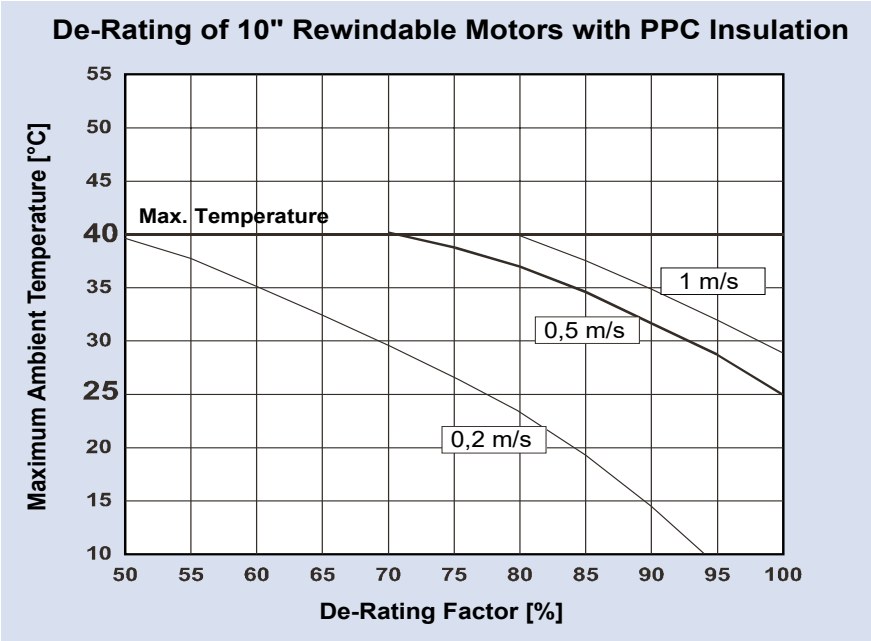

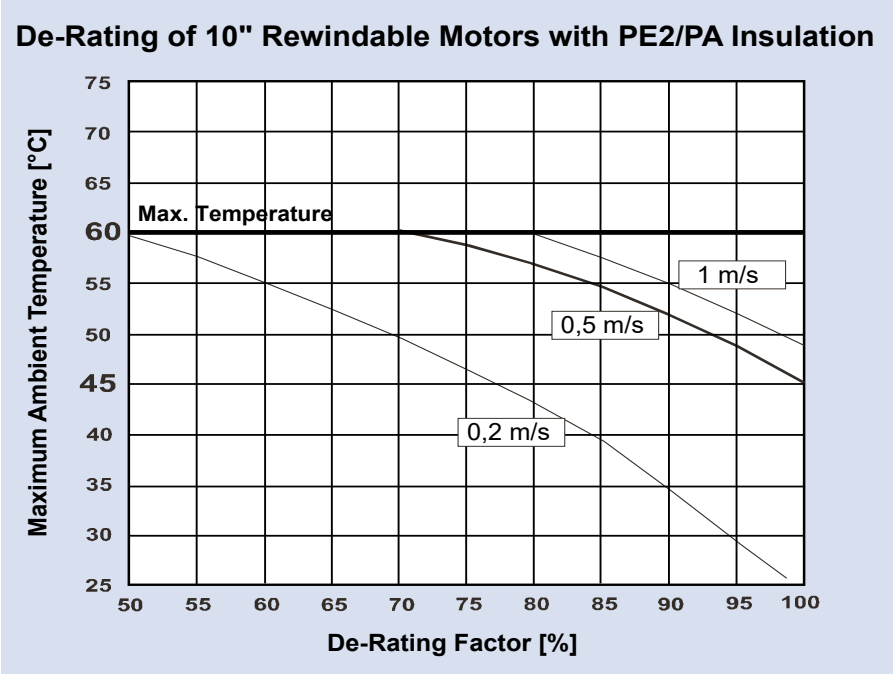

If these conditions are not met please contact Franklin Electric !

10" Rewindable Motors - Motor Leads

DOL

Lead	P_N [kW]	Ø [mm²]	B / H [mm]		Lengths [m]	Qyt.	Lead Mod.- Nr.	Lead seal Kit WW / 316 Mod.- Nr.	Lead seal Kit 904L Mod.- Nr.
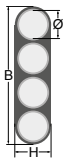	85	4G25	B	44,3	6	1	308 710 116	308 660 720	308 660 724
			H	14,5					
	110 – 130	4G35	B	48,5	6	1	308 710 117	308 660 721	308 660 725
			H	16,5					
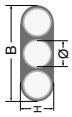	130 - 150 (PE2/PA)	3X50	B	46,5	6	1	308 710 113	308 660 712	308 660 726
			H	19,5					
	185**	1X70	D	20,7	6	3	308 711 100 (KIt with 3 single leads 1x70)	308 660 732	308 660 733

YΔ

Lead	P_N [kW]	Ø [mm²]	B / H [mm]		Lengths [m]	Qyt.	Lead Mod.- Nr.	Lead seal Kit WW / 316 Mod.- Nr.	Lead seal Kit 904L Mod.- Nr.
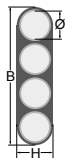 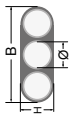	**85**	3X16	B	28,8	6	1	308 710 118	308 660 722	308 660 727
			H	12,2					
		4G16	B	38,0		1			
			H	12,8					
	110 - 150	3X25	B	37,5	6	1	308 710 114	308 660 713	308 660 728
			H	16					
		4G25	B	44,3		1			
			H	14,5					
	185	4G35	B	48,5	6	1	308 710 121	308 660 723	308 660 729
			H	16,5					
		3X35	B	38,5		1			
			H	16,5					

For PE2/PA motors additionally the special Tape **700 541 688** is absolutely necessary

Ground lead* (optional)	Ø [mm²]	D Ø [mm]	Lengths [m]	St.	Mod.-Nr.
	1G25	13,0	8	1	308 053 080
	1G35	15,3	6	1	308 056 060

*only for WW and 316SS

Lead opening seal kit	85 – 185 kW DOL / YΔ	WW / 316	308 660 715
		904L	308 660 730

Cables are designed for submerged operation. For air operation please consult Franklin Electric.

Electrical Connection

DOL	DOL II	YΔ
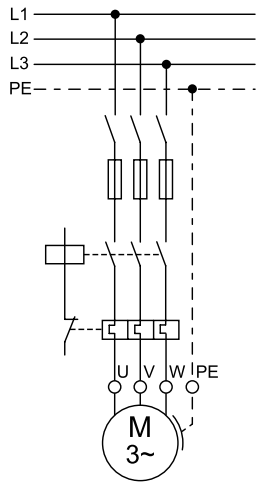	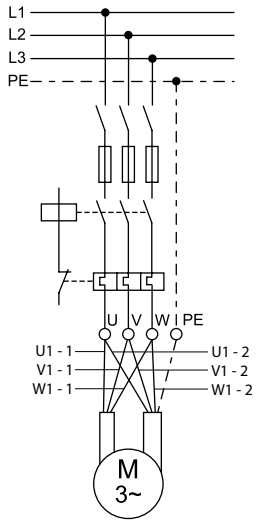	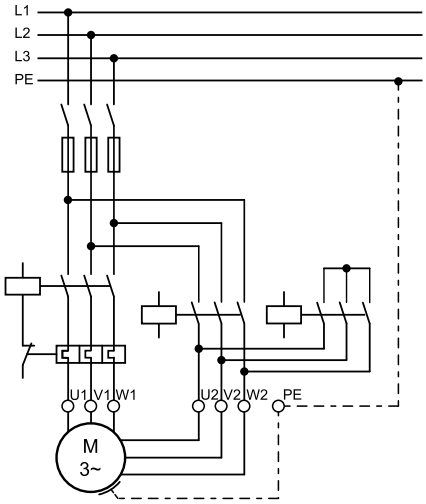

U	V	W	PE
brown	grey	black	yellow/green

10" Rewindable Spare Parts

Kit 1 Thrust Bearing Kit	WW/316SS/ 904L	Incl.Pos.: 17; 19; 20; 21; 32; 33	308 750 701
Kit 2 Radial Bearing Kit	WW/316SS/ 904L	Incl.Pos.: 15; 34	308 751 701
Kit 3 Seal Kit	WW/316SS	Incl.Pos.: 1 - 4; 11; 17; 25	308 800 703
	904L		308 800 704
Kit 4 Up-Thrust Kit	WW/316SS/ 904L	Incl.Pos.: 18	308 751 702
Kit 5 Screw Kit	WW/316SS	Incl.Pos.: 2.0; 5; 8; 13; 24; 37; 40	308 660 701
	904L		308 660 702
Kit 6 Lead Seal Kit	WW/316SS/ 904L	Incl.Pos.: 5; 6; 7	see page 165
Kit 7 PT100 Kit	WW/316SS/ 904L	Incl.Pos.: 9	see page 202
Kit 8 Valve Kit	WW	Incl.Pos.: 10; 11; 39	308 800 414

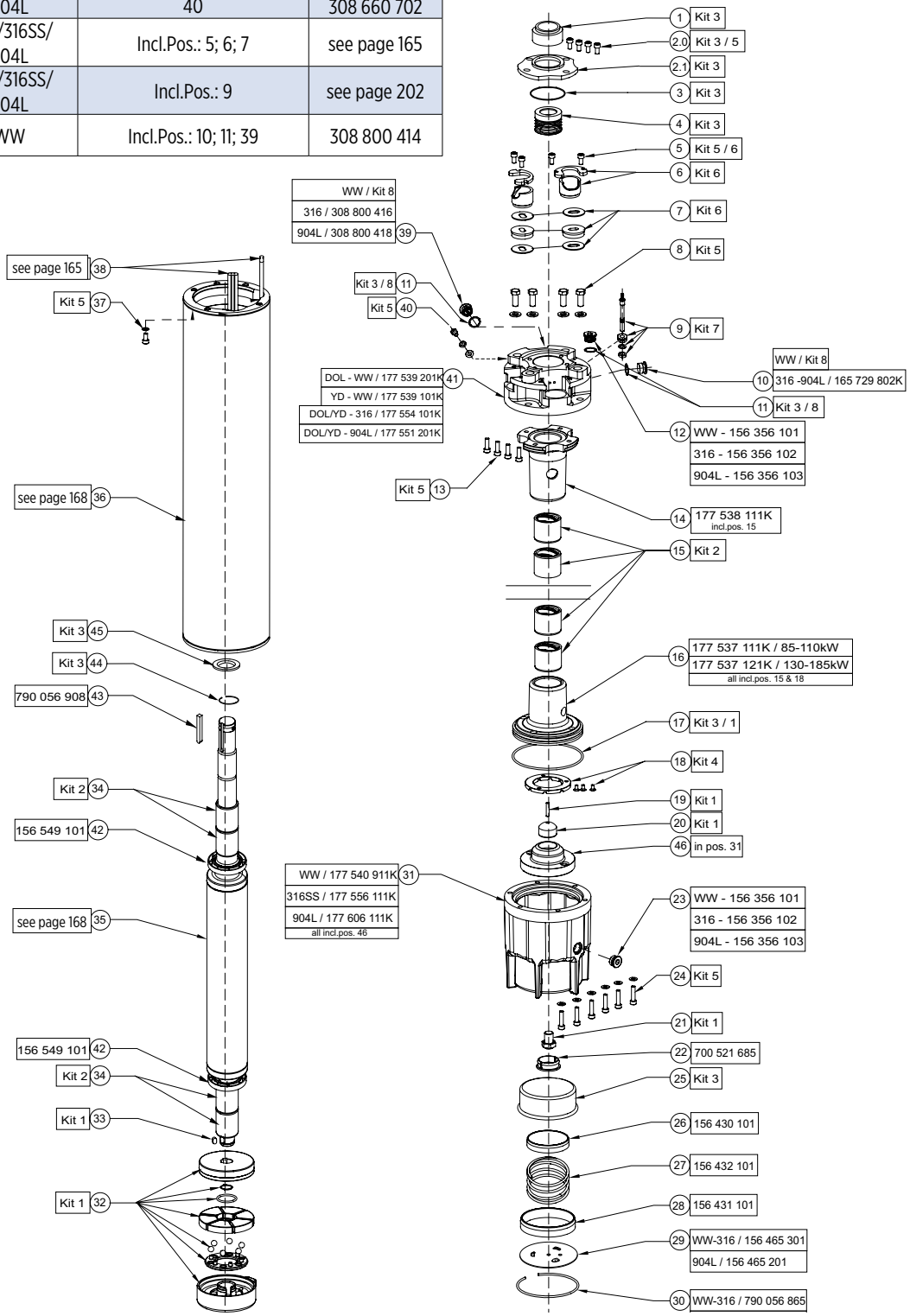

Stator and Rotor Model Number (50 / 60Hz)

P_N [kW]	U_N / f [V] / [Hz]	Stator (incl. Winding and 6 m motor lead)								Rotor
		WW/316		904L		WW/316		904L		
		DOL PPC	DOL PE2/PA	DOL PPC	DOL PE2/PA	YΔ PPC	YΔ PE2/PA	YΔ PPC	YΔ PE2/PA	
85	380 - 415/50 460/60	326 150 931	326 292 931	326 150 921	326 292 921	326 150 981	326 292 981	326 150 971	326 292 971	176 379 801K
110	380 - 415/50 460/60	326 158 931	326 302 931	326 158 921	326 302 921	326 158 981	326 302 981	326 158 971	326 302 971	176 379 802K
130	380 - 415/50 460/60	326 168 931	326 314 931	326 168 921	326 314 921	326 168 981	326 314 981	326 168 971	326 314 971	176 379 803K
150	380 - 415/50 460/60					326 177 981	326 325 981	326 177 971	326 325 971	176 379 804K
185	380 - 415/50 460/60		326 448 931			326 360 981	326 448 981	326 360 971	326 448 971	176 379 805K

PPC Insulation Standard Windings (380 – 415V/50Hz / 460V/60 Hz)

P_N [kW]	Mod.-No. Windingktis	Turns per coil	Wire diameter [mm]	Type of Isolation	Group connection	Total Wire length [m]	Resistance coil [Ω]	Resistance YΔ (U1-U2) [Ω]	Resistance Dol (U1-V1) [Ω]
85	326 150 999	11+11+11+11	2,5 / 3,6	PPC	Parallel	487,92	0,2825	0,141	0,094
110	326 158 999	8+9+8+9	2,8 / 4,0	PPC	Parallel	426,00	0,1955	0,1080	0,0680
130	326 168 999	7+8+7+8	2,2 / 3,1 2DR.II	PPC	Parallel	849,60	0,1579	0,0789	0,0570
150	326 177 999	6+7+6+7	2,3 / 3,3 2DR.II	PPC	Parallel	809,76	0,1374	0,0730	0,0458
185	326 360 999	5+5+6+5	2,5 / 3,6 2DR.II	PPC	Parallel	736,56	0,1050	0,0570	0,035

PE2/PA Insulation Standard Windings (380 – 415V/50Hz / 460V/60 Hz)

P_N [kW]	Mod.-No. Windingktis	Turns per coil	Wire diameter [mm]	Type of Isolation	Group connection	Total Wire length [m]	Resistance coil [Ω]	Resistance YΔ(U1-U2) [Ω]	Resistance Dol (U1-V1) [Ω]
85	326 292 999	11+11+11+11	2,3 / 3,5	PE2/PA	Parallel	488	0,3337	0,1668	0,1112
110	326 302 999	8+9+8+9	2,6 / 3,9	PE2/PA	Parallel	426	0,2267	0,1133	0,0755
130	326 314 999	7+8+7+8	2,0 / 3,1 2DR.II	PE2/PA	Parallel	850	0,1910	0,0955	0,0636
150	326 325 999	6+7+6+7	2,1 / 3,3 2DR.II	PE2/PA	Parallel	810	0,1647	0,0823	0,0549
185	326 448 999	5+5+6+5	2,3 / 3,5 2DR.II	PE2/PA	Parallel	735	0,1240	0,0620	0,0413

Insulation resistant (20°C / 500 VDC)

New motor without drop cable	400 > MΩ
Used motor without drop cable	20 > MΩ
New motor with drop cable	4 > MΩ
Used motor with drop cable	1 MΩ

10" REWINDABLE STANDARD MOTOR

10" REWINDABLE MOTORS DIMENSION AND MATERIALS

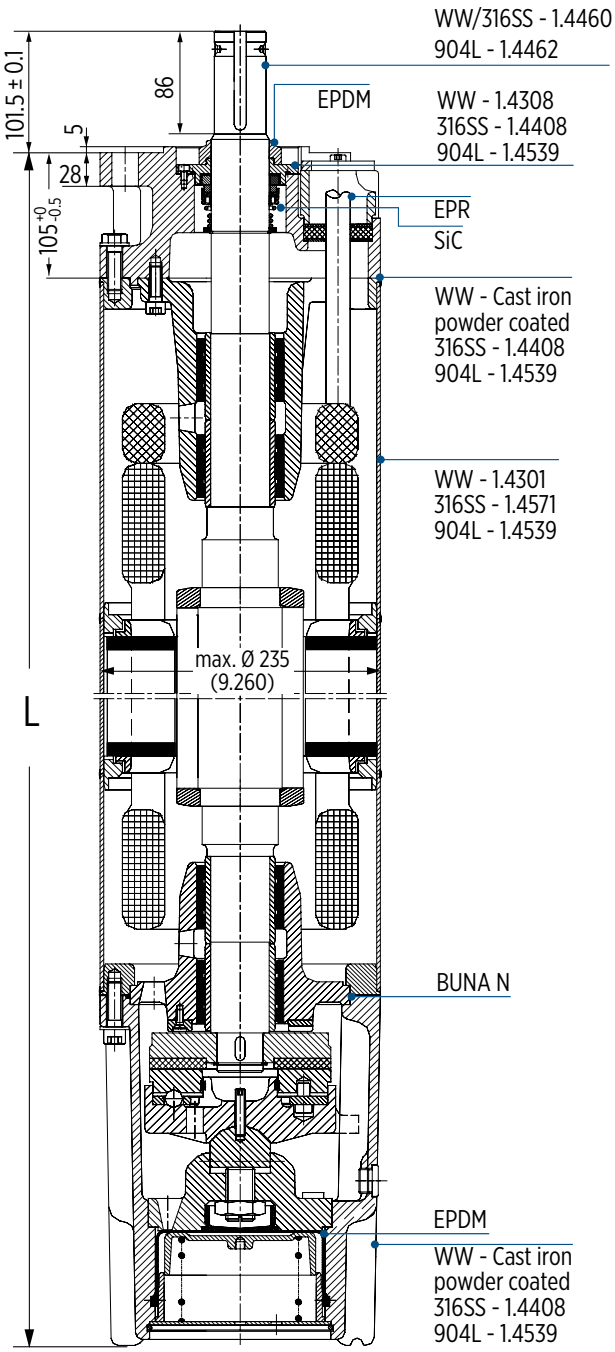

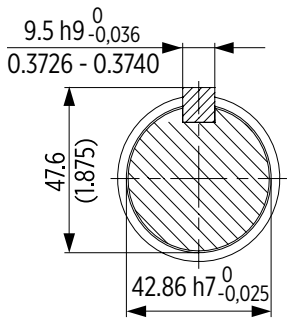

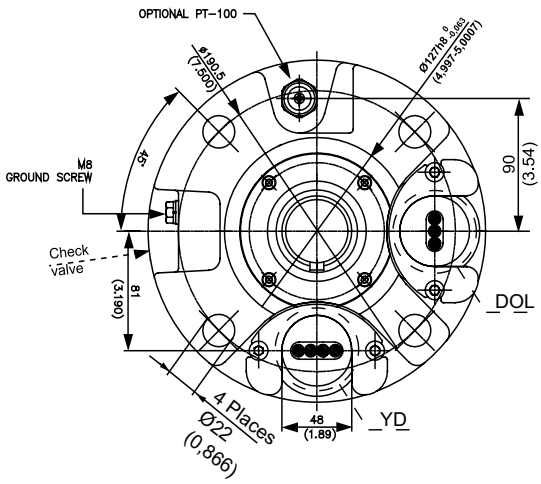

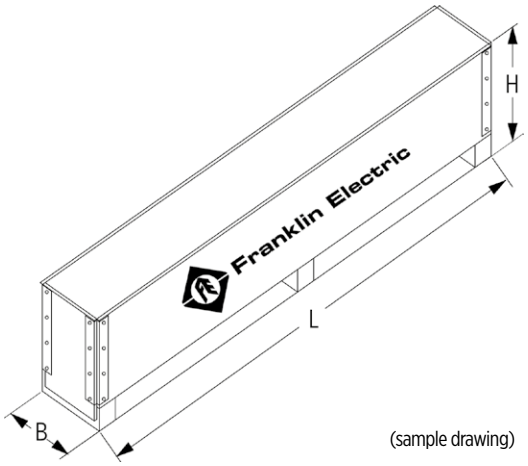

(sample drawing)

P_N [kW]	Motor lengths	Motor weights [kg]		Motor shipping size [mm]		
	L [mm]	Motor	Incl. Pack	B	H	L
85	1419	280	326	341	514	1896
110	1529	315	361			
130	1659	362	412	341	514	2246
150	1769	413	463			
185	1919	449	499			

10″ REWINDABLE PERMANENT MAGNET MOTOR

Rewindable motors with best class winding wires

WATER WELL WW CI PC / 304SS | STAINLESS STEEL 316 | STAINLESS STEEL 904L

SAND FIGHTER

BENEFITS & FEATURES

- Motors for operation with Variable frequency drive (VFD)
- 10″ double flange mounting design
- Factory filled with Franklin's FES93 motor fill solution
- High capacity Kingsbury type liquid lubricated 60 kN thrust bearing and radial bearings for 100 % maintenance free operation
- Pressure-equalizing diaphragm, spring pre-loaded
- Stainless Steel keyed shaft
- SandFighter™ sealing system with SIC mechanical seal and sand slinger
- High efficiency electrical design for low operation costs
- Drinking water approvals

STANDARD SPECIFICATION

- Motorleistung:
  - 150 kW - 200 kW - 250 kW (100 Hz - 3000 rpm)
  - 173 kW - 230 kW - 290 kW (120 Hz - 3600 rpm)
- Max. storage temperature -15°C to +60°C
- Standard motor with PE2/PA winding insulation
- Nominal ambient temperature: 30 °C with 0.5 m/s cooling flow
- System Supply Voltage: 400 V (100 Hz) / 460 V (120 Hz)
- Voltage Tolerance: ± 10 % U_N
- Protection IP68
- Standard Motor: WW- Water well Design (Stator 304SS / Castings - CI Powder coated)
- Motor protection: DIN 61947-4-1
- DOL- start
- Frequency of starts: 10 starts/ hour (with min. 3 minutes resting time), equally distributed
- Motor lead length: 6 m
- Motors installation orientation: Vertical / horizontal (shaft end heightened) - 250 kW motors may not be installed horizontally (if required please contact Franklin Electric)
- Rotation counter clock wise facing shaft end (rotation reversible)
- All motors with factory installed leads

OPTIONS

- Higher-graded materials: 316SS and 904L
- Special voltages
- Retrofitable PT 100 temperature sensor
  VFD PT100 Plug-in card necessary (order no. 308 170 202)

3~ DOL MODEL NUMBERS 400 V / 100 HZ**

P_N [kW]	U_N [V]	400V / 100 Hz WW * Motor model number	400V / 100 Hz 316SS Motor model number	400V / 100 Hz 904L Motor model number
150	400	264 025 5311	264 025 6311	264 025 7311
200	400	264 028 5311	264 028 6311	264 028 7311
250	400	264 029 5311	264 029 6311	264 029 7311

* WW motor - brackets Cast Iron Powder coated
** PM motors are to be operated by Variable frequency drive (VFD)

10" REWINDABLE PERMANENT MAGNET MOTOR

EFFICIENCY CURVE AT 3000 RPM

Motor η 400 V / 100 Hz [%] = f (P2 [kW])

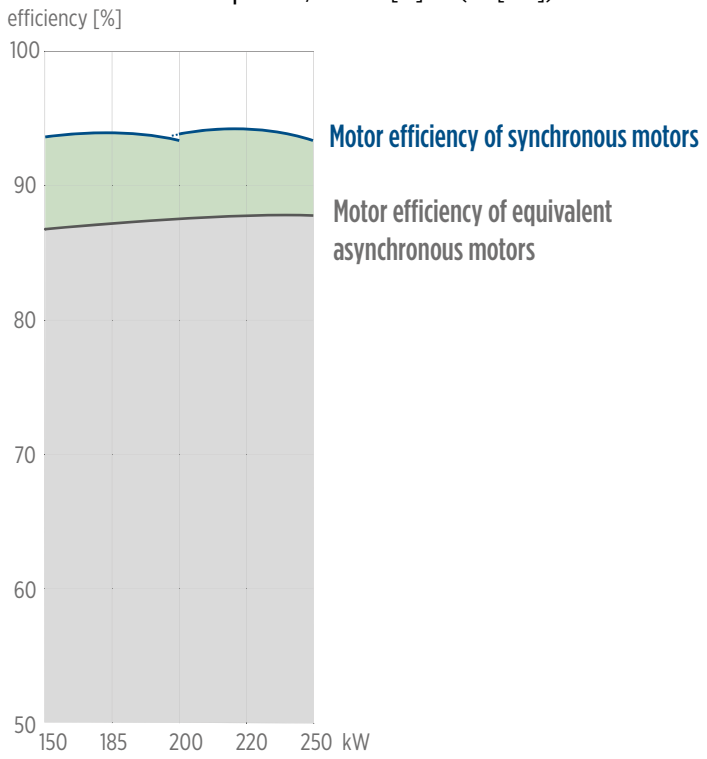

MOTOR PERFORMANCE DATA 400 V / 100 HZ

motor model no.	P_N [kW]	Thrust F [kN]	n_N [min^{-1}]	I_N [A]	I_A/I_N* [A]	η [%]	cos phi	T_N [Nm]	T_A/T_N* [Nm]
264 025 xxxx	110	60	3000	199,5	1	93,0	0,93	353	1
	130	60	3000	236,1	1	93,0	0,93	415	1
	150	60	3000	274,0	1	93,0	0,93	478	1
264 028 xxxx	150	60	3000	284	1	94.3	0.95	478	1
	185	60	3000	354	1	94.1	0.96	589	1
	200	60	3000	389	1	93.8	0.96	637	1
264 029 xxxx	200	60	3000	377	1	94.5	0.95	637	1
	220	60	3000	423	1	94.3	0.96	701	1
	250	60	3000	497	1	93.8	0.96	796	1

MOTOR PERFORMANCE DATA 460 V / 120 HZ

motor model no.	P_N [kW]	$P_{max.}$ [kW]	Thrust F [kN]	n_N [min^{-1}]	I_{MAX} [A]	I_A/I_{MAX}* [A]	η [%]	cos phi	T_N [Nm]	T_A/T_N* [Nm]
264 025 xxxx	110	127	60	3600	199,5	1	93,0	0,93	353	1
	130	150	60	3600	236,1	1	93,0	0,93	415	1
	150	173	60	3600	274,0	1	93,0	0,93	478	1
264 028 xxxx	150	173	60	3600	284	1	94,3	0,95	478	1
	185	213	60	3600	354	1	94,1	0,96	589	1
	200	230	60	3600	389	1	93,6	0,96	637	1
264 029 xxxx	200	230	60	3600	377	1	94,5	0,95	637	1
	220	253	60	3600	423	1	94,3	0,96	701	1
	250	287	60	3600	497	1	93,6	0,96	796	1

Performance data are based on measurements with Franklin Electric original equipment.
*Since this is an integrated system (motor plus electronics) these figures relate to VFD input.

10" REWINDABLE PERMANENT MAGNET MOTOR

MOTOR LEADS 10" REWINDABLE PERMANENT MAGNET MOTORS*

lead	P_N [kW]	U_N [V]	ø [mm²]	D [mm]	lenghts [m]	qty.	lead set model no. (3 single wire lead)	lead seal kit model no.
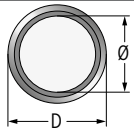	all ratings	400	3 x 1X70	20.7	6	1	308 711 100	308 660 740

ground lead (optional)	Ø [mm²]	D [mm]	lengths [m]	qty.	lead model no.
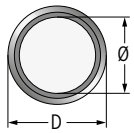	1G35	15.3	6	1	308 056 060

* Leads are designed for submerged operation. For air operation please consult Franklin Electric.

Lead opening seal kit		qty.	model no.
10" Rew	WW / 316SS	1	308 660 715
	904L	1	308 660 730

ELECTRICAL CONNECTION DOL

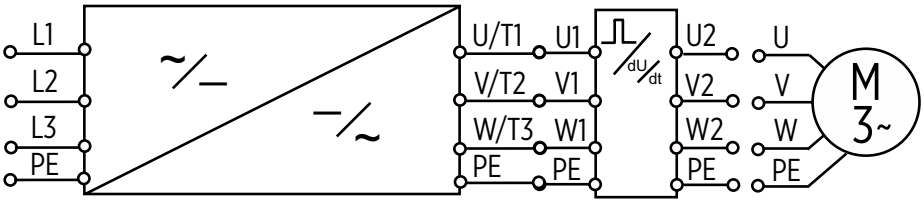

U	V	W	PE
brown	grey	black	yellow/ green

10" REWINDABLE PERMANENT MAGNET MOTOR

10" REWINDABLE PM MOTORS DIMENSION AND MATERIALS

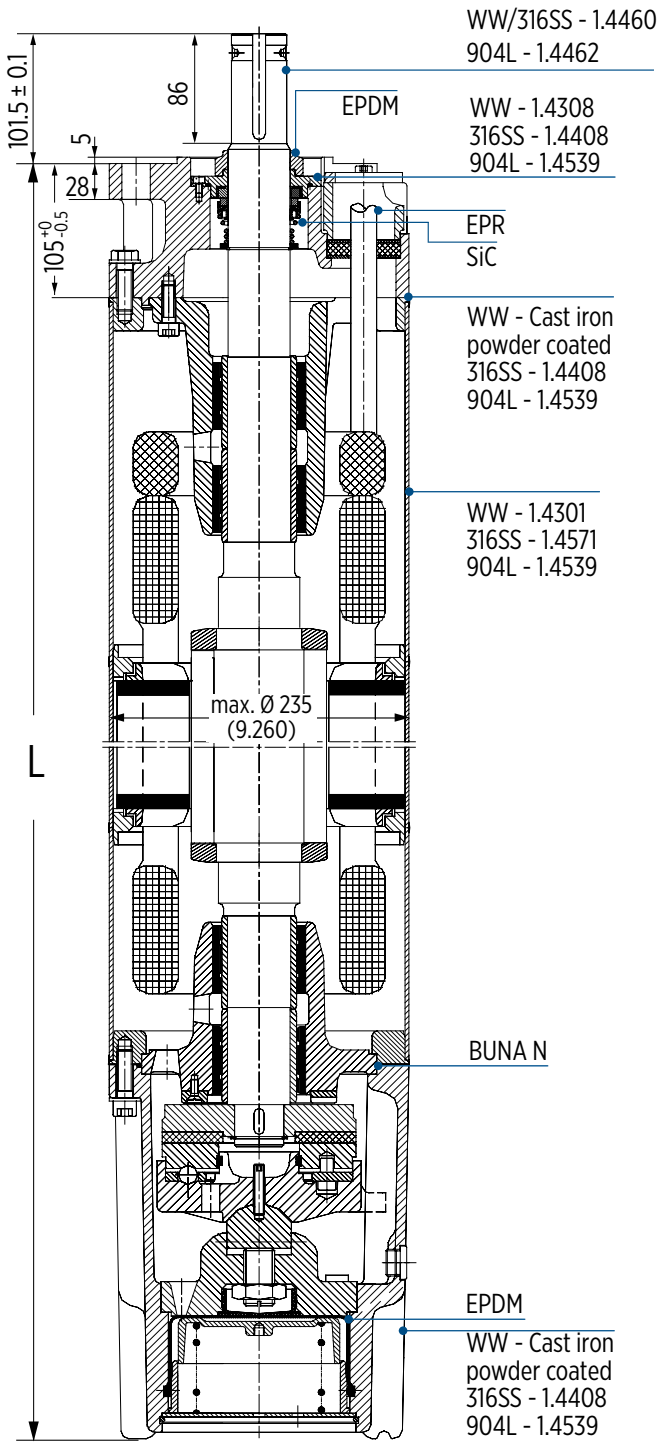

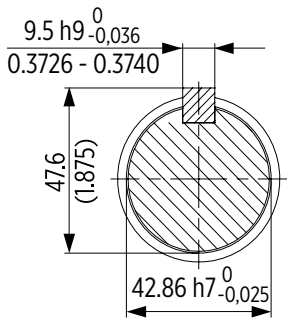

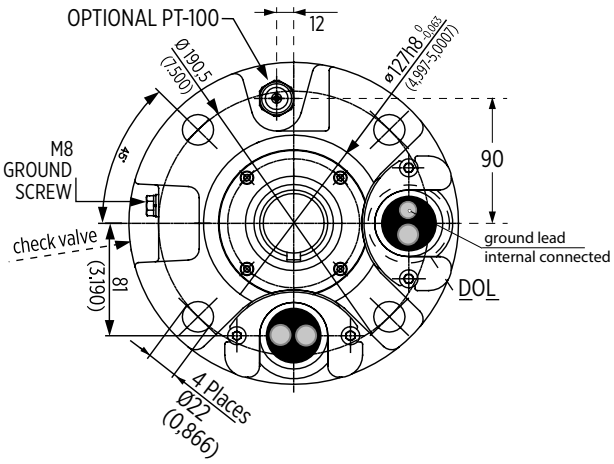

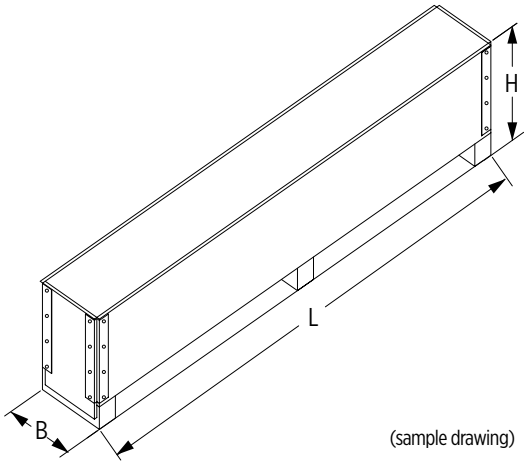

P_N [kW]	Motor lenghts L [mm]	Motor weights [kg]	Motor weights incl. box [kg]	Motor shipping size [mm]		
				B	H	L
150	1549	311	361	341	514	2246
200	1659	331	381			
250	1769	350	400			

10" REWINDABLE PERMANENT MAGNET MOTOR

10" REWINDABLE PERMANENT MAGNET MOTORS SPARE PARTS

Kit	Kit description	materials	including positions	order no
1	Thrust bearing kit	WW / 316SS / 904L	17, 19, 20, 21, 32, 33	308 750 701
2	Radial bearing kit	WW / 316SS / 904L	15	308 751 703
3	seal kit	WW / 316SS	1-4, 11, 17, 25	308 800 703
		904L		308 800 704
4	Up-thrust bearing kit	WW / 316SS / 904L	18	308 751 702
5	Screw kit	WW / 316SS	2.0, 5, 8, 13, 24, 37, 40	308 660 701
		904L		308 660 702
6	Lead seal kit	WW / 316SS / 904L	5, 6, 7	➡ page 172
7	PT100 kit	WW / 316SS / 904L	9	➡ page 202
8	Valve Kit	WW	10, 11, 39	308 800 414

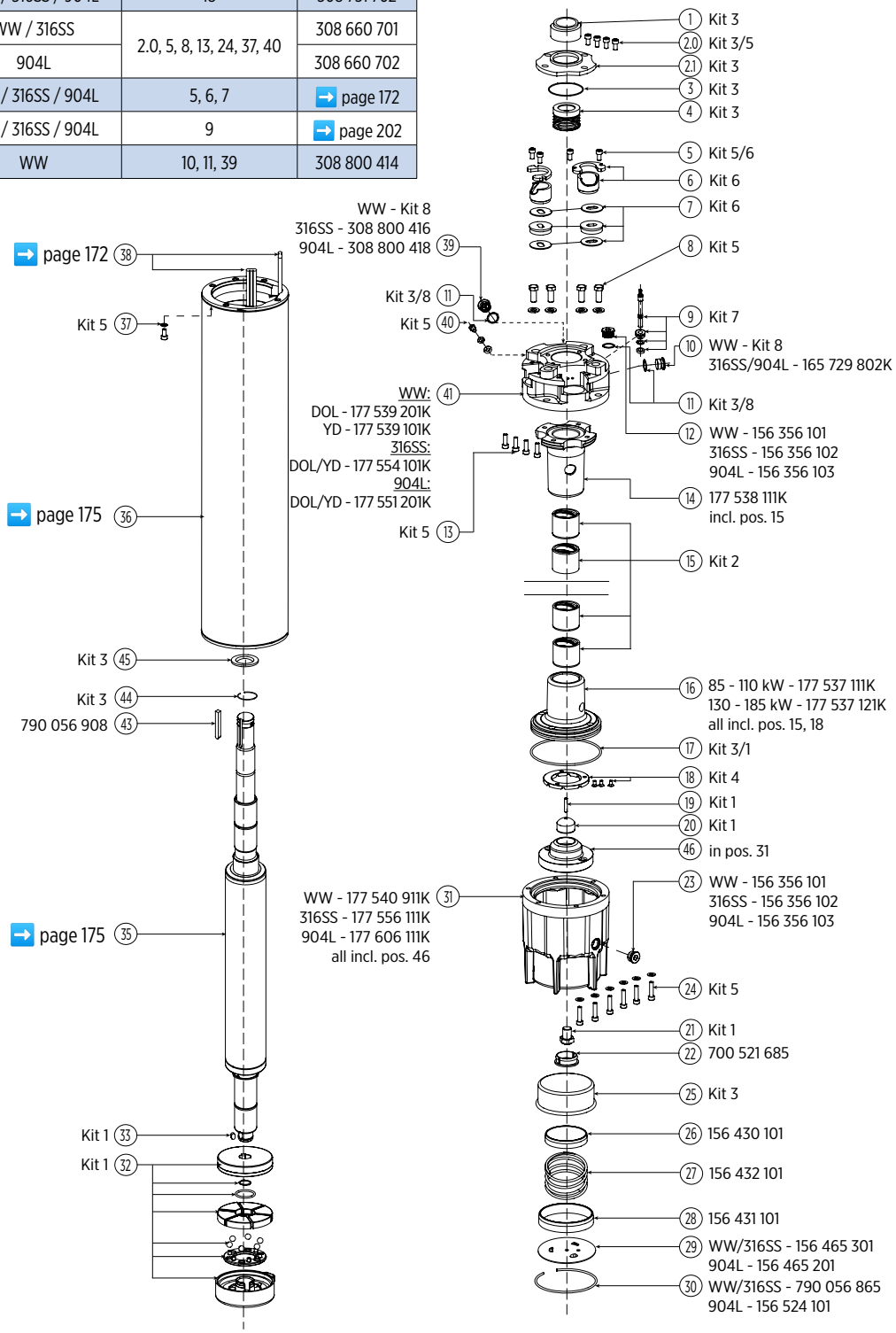

10" REWINDABLE PERMANENT MAGNET MOTOR

MODEL NUMBERS 400 V STATOR AND ROTOR - WW/316SS

P_N [kW]	U_N [V]	Stator (incl. winding and 6m motor lead)	Rotor
150	400	327 *** ***	100000*******K
200	400	327 640 931	10000005599K
250	400	327 641 931	10000005857K

WINDING DATA 400 V

P_N [kW]	U_N [V]	Model No. Winding kit	Turns per coil	Wire diameter [mm]	Type of Isolation	Groups connection	Total wire lenght [m]	Resistance coil [Ω]	Resistance Dol (U1-V1 [Ω]
150	400	327 6** ***			PE2/PA	Parallel Star			
200	400	327 640 999	7 - 7	2,4 / 3,7 / 3,9	PE2/PA	Parallel Star	780	0,0305	0,0305
250	400	327 641 999	6 - 6	3,0 / 4,5 / 4,8	PE2/PA	Parallel Star	560	0,0265	0,0265

INSULATION RESISTANCE (20 °C / 500 V DC)

New motor without drop cable	400 >	MΩ
Used motor without drop cable	20 >	MΩ
New motor with drop cable	4 >	MΩ
Used motor with drop cable	1	MΩ

MOTOR REPAIR INSTRUCTION

- Pictured repair instructions WW / 316SS / 904L (model no. 10000006792)

12" REWINDABLE MOTOR

Rewindable motors with best class winding wires

SAND FIGHTER

WATER WELL WW CI PC / 304SS

OPTIONAL STAINLESS STEEL 316

FEATURES & BENEFITS

- 12" double flange mounting design
- Factory filled with Franklin's FES93 motor fill solution
- VFD operation is possible up to a supply voltage of 460V and with PE2/PA (in compliance with the application guidelines in the motor operating instructions and the VFD manufacturer). For VFD operation with higher voltages, please consult Franklin Electric.
- High capacity Kingsbury type liquid lubricated thrust bearing and radial bearings for 100 % maintenance free operation
- Pressure-equalizing diaphragm
- Stainless Steel keyed shaft
- SandFighter™ sealing system with SIC mechanical seal and sand slinger
- High efficiency electrical design for low operation costs
- Standard Motor: WW- Water well Design (Stator 304SS / Castings - CI Powder coated)
- Drinking water approvals

STANDARD SPECIFICATION

- Ratings: 185 - 400 kW
- Max. storage temperature - 15 °C to + 60 °C
- Nominal ambient temperature: 30 °C with 0.5 m/s cooling flow
- Standard Voltage:
  380 - 415 V (50 Hz), 460 V (60 Hz), 500 V (50 Hz), 1000 V (50 Hz)
- Voltage Tolerance:
  50 Hz: -10 % / +6 % U_N [380 - 415 V = (380 - 10 %) – (415 + 6 %)]
  60 Hz: ±10 % U_N
- Protection IP68
- Motor protection: DIN 61947-4-1
- Frequency of starts: 5 starts/ hour (with min. 3 minutes resting time), equally distributed
- DOL / YΔ - start (pos. of cables 90 °)
- Motor lead length: 6 m
- Installation orientation: Vertical / horizontal (shaft end heightened)
- Rotation counter clock wise facing shaft end (rotation reversible)
- All motors with factory installed leads

OPTIONS

- Higher-graded materials: 316SS
- Special voltages
- Retrofitable PT 100 temperature sensor
- 80 kN Thrust load version
- Special lead lengths on request

12″ Rewindable Motors - Model Numbers*

P_N [kW]	U_N [V] / [Hz]	Model Numbers Digit 1 – 6		Model Numbers Digit 7 – 10			
		DOL	YΔ	WW**	316SS	High Thrust 80kN	
						WW**	316SS
185	380 - 415 / 50 460 / 60	265 610	265 710	5011	6011	5111	6111
	500 / 50	265 620	265 790				
	1000 / 50	265 510					
220	380 - 415 / 50 460 / 60	265 611	265 711	5011	6011	5111	6111
	500 / 50	265 621	265 791				
	1000 / 50	265 511					
250	380 - 415 / 50 460 / 60	265 612	265 712	5011	6011	5111	6111
	500 / 50	265 622	265 792				
	1000 / 50	265 512					
300	380 - 415 / 50 460 / 60	265 614	265 714	5011	6011	5111	6111
	500 / 50	265 624	265 794				
	1000 / 50	265 514					
350	380 - 415 / 50 460 / 60		265 716	5011	6011	5111	6111
	500 / 50	265 626	265 796				
	1000 / 50	265 516					
400	380 - 415 / 50 460 / 60		265 717	5011	6011	5111	6111
	500 / 50	265 627	265 797				
	1000 / 50	265 517					

* VFD operation is only allowed up to 460V supply voltage, for higher voltages please consult Franklin Electric Europa GmbH

** WW motor - brackets Cast Iron Powder coated

12″ Rewindable Motors - Performance Data 50Hz

P_N [kW]	Thrust F [N]	U_N [V]	n_N [min-1]	I_N [A]	I_A/I_N [A]	η (Eff.) [%] at % load			cos φ (PF) at % load			T_N [Nm]	T_A/T_N [Nm]
						50	75	100	50	75	100		
185	60 000	380	2940	368	4,70	88	88	87	0,82	0,87	0,88	602	0,81
		400	2945	351	5,30	87	88	87	0,79	0,85	0,86	600	0,90
		415	2950	344	5,76	87	88	88	0,76	0,84	0,84	599	0,97
		500	2940	286	5,30	87	88	87	0,79	0,85	0,87	600	0,90
		1000	2945	141	5,30	87	88	87	0,79	0,85	0,86	600	0,90
220	60 000	380	2930	448	4,79	88	88	87	0,83	0,87	0,88	716	0,77
		400	2935	430	5,40	88	89	88	0,80	0,86	0,87	714	0,84
		415	2940	427	5,85	88	89	88	0,77	0,85	0,84	712	0,94
		500	2940	334	5,40	88	89	88	0,80	0,86	0,88	714	0,84
		1000	2945	177	5,40	88	89	88	0,80	0,86	0,87	714	0,84
250	60 000	380	2930	507	4,7	87	87	86	0,85	0,88	0,85	815	0,85
		400	2935	481	5,2	88	89	88	0,80	0,85	0,80	812	0,95
		415	2940	471	5,6	88	89	88	0,76	0,83	0,76	812	1,02
		500	2935	385	5,2	88	89	88	0,80	0,85	0,88	812	0,95
		1000	2930	193	5,2	88	89	88	0,80	0,85	0,85	812	0,95
300	60 000	380	2940	586	4,9	88	89	87	0,87	0,90	0,88	974	0,83
		400	2945	551	5,6	88	89	88	0,85	0,89	0,88	971	0,94
		415	2950	532	6,0	88	89	88	0,83	0,88	0,89	970	1,03
		500	2945	435	5,6	88	89	88	0,85	0,89	0,88	971	0,94
		1000	2945	217	5,6	88	89	88	0,85	0,89	0,88	971	0,94
350	60 000	380	2920	720	4,7	88	88	86	0,85	0,88	0,87	1140	0,80
		400	2930	676	5,2	88	88	87	0,82	0,87	0,88	1137	0,90
		415	2935	652	5,4	87	88	87	0,79	0,86	0,87	1135	0,95
		500	2930	541	5,2	88	88	87	0,82	0,87	0,87	1137	0,90
		1000	2930	270	5,2	88	88	87	0,82	0,87	0,87	1137	0,90
400	60 000	380	2920	795	4,2	90	90	89	0,85	0,88	0,87	1306	0,73
		400	2930	750	4,8	90	90	90	0,82	0,87	0,87	1301	0,84
		415	2940	719	5,2	89	90	90	0,80	0,85	0,87	1299	0,92
		500	2930	600	4,8	90	90	90	0,82	0,87	0,87	1301	0,84
		1000	2935	289	4,8	90	90	90	0,82	0,87	0,87	1301	0,84

12″ Rewindable Motors - Performance Data 60Hz

P_N [kW]	P_{max} [kW]	Thrust F [N]	U_N [V]	n_N [min-1]	I_{max} [A]	I_A/I_N [A]	η_{max} (Eff.) [%] at % load			$\cos\varphi_{max}$ (PF) at % load			T_{max} [Nm]	T_A/T_N [Nm]
							50	75	100	50	75	100		
185	**212**	60 000	460	3540	339							0,87		
220	**252**	60 000	460	3530	425	5,44	90	91	91	0,81	0,84	0,86	776	0,95
250	**287**	60 000	460	3530	462	5,44	90	91	91	0,81	0,84	0,84	776	0,95
300	**345**	60 000	460	3530	533	5,85	90	91	91	0,85	0,89	0,89	928	0,94
350	**402**	60 000	460	3530	647	5,13	89	90	90	0,83	0,87	0,88	1085	0,90
400	**460**	60 000	460	3520	745	4,79	89	90	90	0,84	0,87	0,87	1243	0,84

12″ Rewindable Motors - Motor Leads*

Lead	Ø [mm²]	D [mm]	Lengths [m]	Motor [kW] 380 - 415V /50Hz 460V / 60Hz	Motor [kW] 500V/ 50Hz	Motor [kW] 1000V / 50Hz	Qyt.	Lead Kit (3 Single Leads)	Lead seal Kit.
	1X70	20,7	6	185 - 300 DOL 300 -400 **YΔ****	185 - 400 DOL	-	**DOL 1** **YΔ 2**	308 711 100	308 661 120
	1X35	15,3	6	185 - 250 **YΔ****	185 - 400 **YΔ****	185 - 400 DOL	**DOL 1** **YΔ 2**	308 711 101	308 661 121

For this standard PE2/PA motors must additionally ordered the special Tape 700 541 688, is absolutely necessary.
** For YΔ motors please order two Lead (sealing) kits

Ground lead* (optional)	Ø [mm²]	D Ø [mm]	Lengths [m]	St.	Mod.-Nr.
	1G25	13,0	8	1	308 053 080
	1G35	15,3	6	1	308 056 060

*only for WW and 316SS

Lead opening seal kit	**250 - 400 kW - DOL / YΔ**	308 661 122

Cables are designed for submerged operation. For air operation please consult Franklin Electric.

Electrical Connection

DOL	DOL II	YΔ
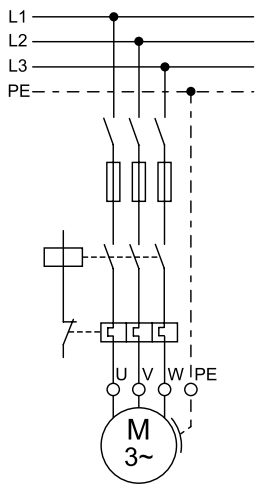	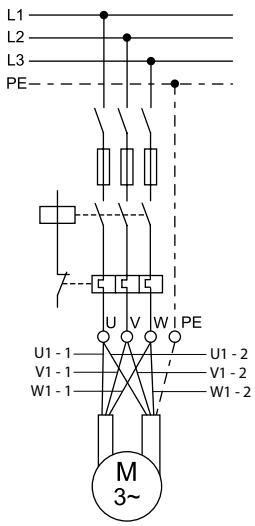	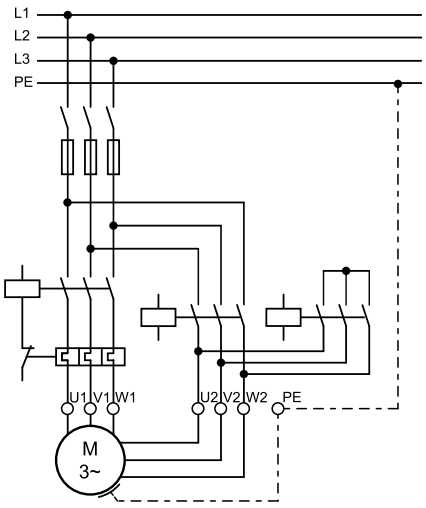

U	V	W	PE
brown	grey	black	yellow/green

12" Rewindable Spare Parts WW

Kit 1 **Thrust Bearing Kit 60kN**	Incl.Pos.: 17; 24; 26; 27; 39; 45	**308 750 801**
Kit 1 **Thrust Bearing Kit 80kN**	Incl.Pos.: 17; 26; 27; 39; 45	**308 750 802**
Motor Conversion Kit 80KN Incl.Pos.: 17; 25; 26; 40; 41, 45; 69		**308 750 803**
Kit 2 **Seal Kit - Top**	Incl.Pos.: 1; 4; 37; 38	**308 800 801**
Kit 3 **Screw Kit**	Incl.Pos.: 6; 9; 19; 24; 37; 46; 47; 65; 67; 68;	**308 656 801**
Kit 5 **Valve Kit**	Incl.Pos.: 8; 10	**308 800 421**
Kit 6 **Lead Seal Kit**	Incl.Pos.: 7	**see page 179**
Kit 7 **PT 100 Kit**	Incl.Pos.: 35	**see page 202**
Kit 8 **Up-Thrust Bearing Kit**	Incl.Pos.: 36	**308 751 702**

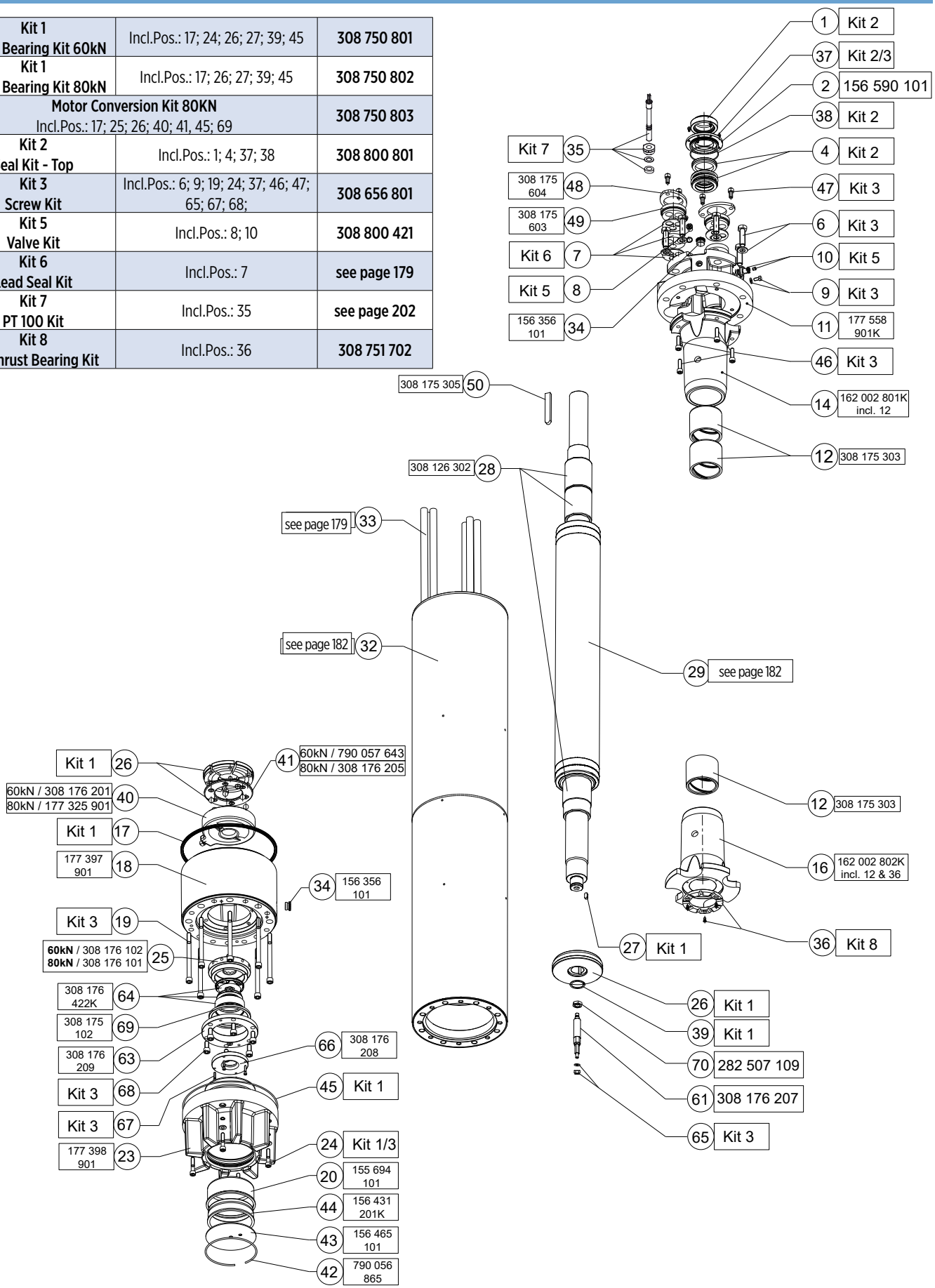

12" Rewindable Spare Parts 316SS

Kit 1 **Thrust Bearing Kit 60kN**	Incl.Pos.: 17; 24; 26; 27; 39; 45	**308 750 801**
Kit 1 **Thrust Bearing Kit 80kN**	Incl.Pos.: 17; 26; 27; 39; 45	**308 750 802**
Motor Conversion Kit 80KN Incl.Pos.: 17; 25; 26; 40; 41; 45; 69		**308 750 803**
Kit 2 **Seal Kit - Top**	Incl.Pos.: 1; 4; 37; 38	**308 800 851**
Kit 3 **Screw Kit**	Incl.Pos.: 6; 9; 19; 24; 37; 46; 47; 65; 67; 68;	**308 656 801**
Kit 5 **Valve Kit**	Incl.Pos.: 8; 10	**165 729 802K**
Kit 6 **Lead Seal Kit**	Incl.Pos.: 7	**see page 179**
Kit 7 **PT 100 Kit**	Incl.Pos.: 35	**see page 202**
Kit 8 **Up-Thrust Bearing Kit**	Incl.Pos.: 36	**308 751 702**

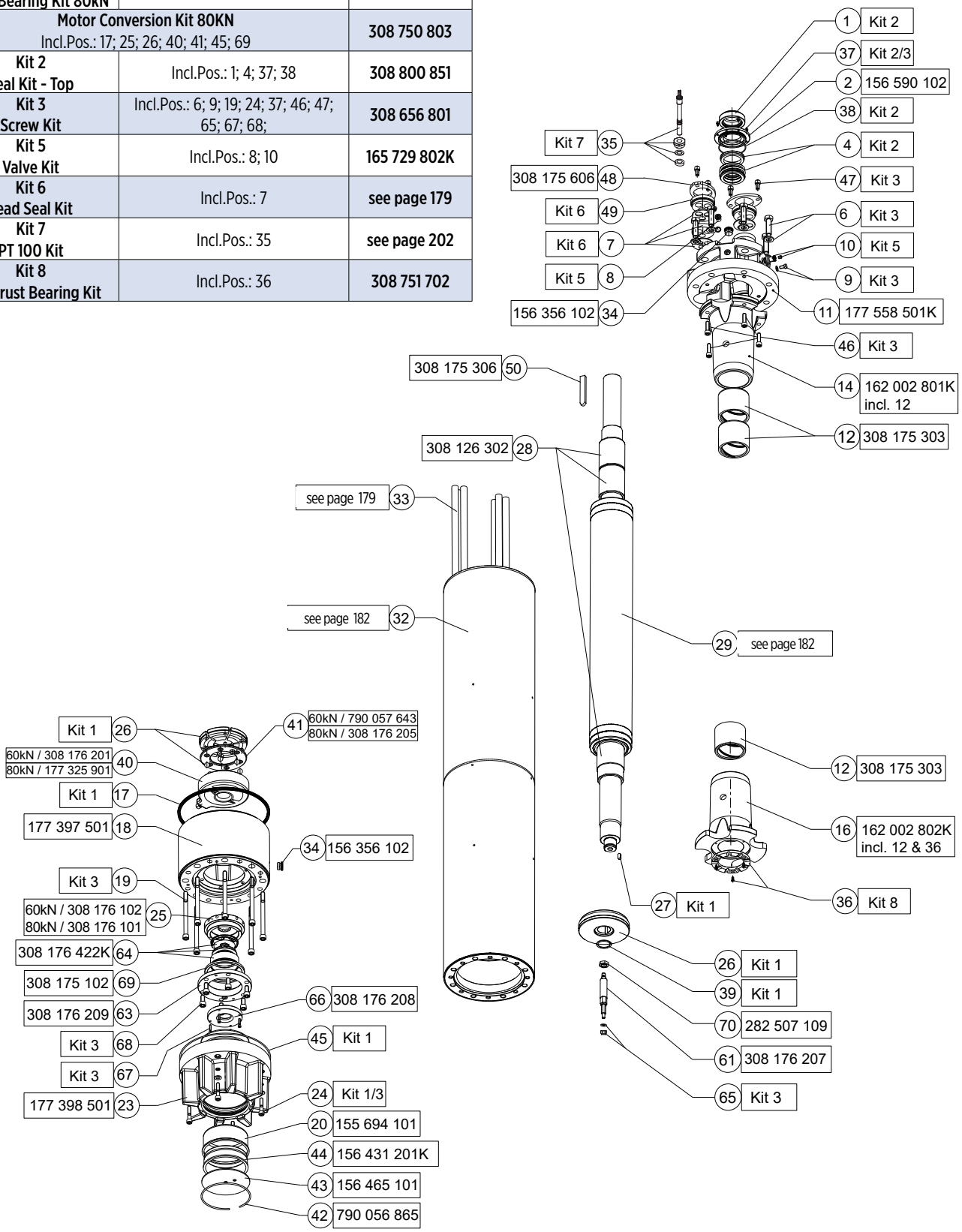

WW/316SS Stator and Rotor Model Number (380 - 415 Volts / 50Hz)

P_N [kW]	U_N / f [V] / [Hz]	Stator (incl. Winding and 6 m motor lead)				Rotor
		DOL PPC	DOL PE2/PA	YΔ PPC	YΔ PE2/PA	
185	380 - 415 / 50 460 / 60		327 013 902K		326 013 952K	176 381 501K
220	380 - 415 / 50 460 / 60		326 639 902K		326 639 952K	176 381 501K
250	380 - 415 / 50 460 / 60		326 639 902K		326 639 952K	176 381 501K
300	380 - 415 / 50 460 / 60		326 640 902K		326 640 952K	176 381 502K
350	380 - 415 / 50 460 / 60				326 696 952K	176 381 504K
400	380 - 415 / 50 460 / 60				326 641 952K	176 381 503K

Insulation Standard Windings (380 – 415 Volts 50 Hz)

P_N [kW]	Mod.-No. Winding-kits	Turns per coil	Wire diameter [mm]	Type of Isolation	Group connection	Total Wire length [m]	Resistance coil [Ω]	Resistance YΔ (U1-U2) [Ω]	Resistance Dol (U1-V1) [Ω]
185	327 013 999	6+6+6+6	2,6 / 3,9 (2GrII)	PE2/PA	Parallel Delta	794	0,1061		
220	326 639 999	5+6+5+6	2,7 / 4,1 (2GrII)	PE2/PA	Parallel Delta	770	0,0235		
250	326 639 999	5+6+5+6	2,7 / 4,1 (2GrII)	PE2/PA	Parallel Delta	770	0,0235		
300	326 640 999	4+5+4+5	3,0 / 4,5 (2GrII)	PE2/PA	Parallel Delta	720	0,0178		
350	326 696 999	4+4+4+5	3,0 / 4,5 (2GrII)	PE2/PA	Parallel Delta	706	0,0175		
400	326 641 999	4+4+4+4	3,4 / 5,0 (2GrII)	PE2/PA	Parallel Delta	700	0,0133		

Insulation Standard Windings (500 Volts 50 Hz)

P_N [kW]	Mod.-No. Winding-kits	Turns per coil	Wire diameter [mm]	Type of Isolation	Group connection	Total Wire length [m]	Resistance coil [Ω]	Resistance YΔ (U1-U2) [Ω]	Resistance Dol (U1-V1) [Ω]
185	326 *** 999								
220	326 701 999	7+7+7+7	2,5 / 3,8 (2GrII)	PE2/PA	Parallel Delta	889	0,0244		
250	326 702 999	6+7+7+7	2,5 / 3,8 (2GrII)	PE2/PA	Parallel Delta	924	0,0331		
300	326 703 999	5+6+5+6	2,7 / 4,1 (2GrII)	PE2/PA	Parallel Delta	861	0,0265		
350	326 697 999	5+5+5+6	2,7 / 4,1 (2GrII)	PE2/PA	Parallel Delta	856	0,0263		
400	326 704 999	5+5+5+5	3,0 / 4,5 (2GrII)	PE2/PA	Parallel Delta	848	0,0221		

Insulation Standard Windings (1000 Volts 50 Hz)

P_N [kW]	Mod.-No. Winding-kits	Turns per coil	Wire diameter [mm]	Type of Isolation	Group connection	Total Wire length [m]	Resistance coil [Ω]	Resistance YΔ (U1-U2) [Ω]	Resistance Dol (U1-V1) [Ω]
185	327 016 999	15+15+15+15	2,3 / 3,5	PE2/PA	Parallel Delta	1138	0,7836		0,221
220	326 928 999	14+14+14+14	2,5 / 3,8	PE2/PA	Parallel Delta	902	0,5251		0,177
250	326 699 999	13+14+13+14	2,5 / 3,8	PE2/PA	Parallel Delta	888	0,1290		0,165
300	326 700 999	11+11+11+11	2,7 / 4,1	PE2/PA	Parallel Delta	825	0,1024		0,135
350	326 698 999	10+11+10+11	2,7 / 4,1	PE2/PA	Parallel Delta	820	0,1017		0,136
400	326 674 999	10+10+10+10	3,0 / 4,5	PE2/PA	Parallel Delta	812	0,0815		0,106

Insulation resistant (20°C / 500 VDC)

New motor without drop cable	400 > MΩ
Used motor without drop cable	20 > MΩ
New motor with drop cable	4 > MΩ
Used motor with drop cable	1 MΩ

12" Motor Design WW / 316SS

Motor - WW / 316SS

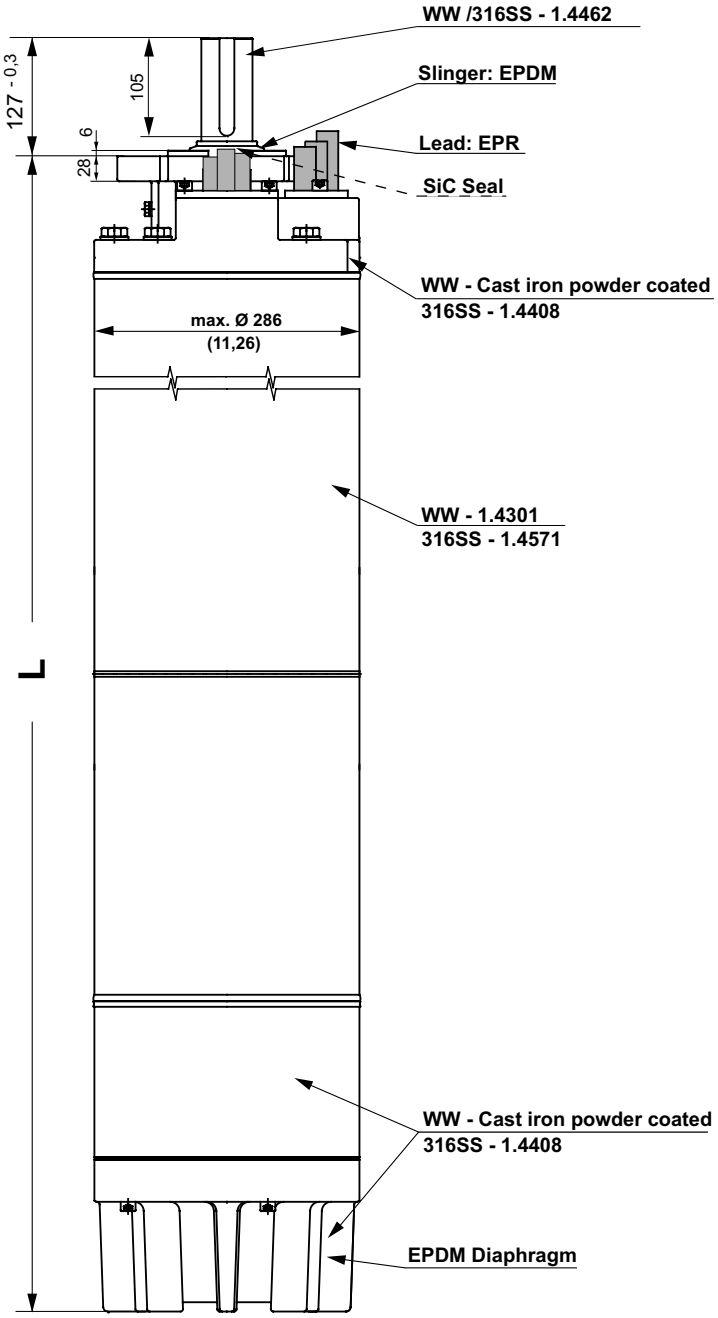

End Bell

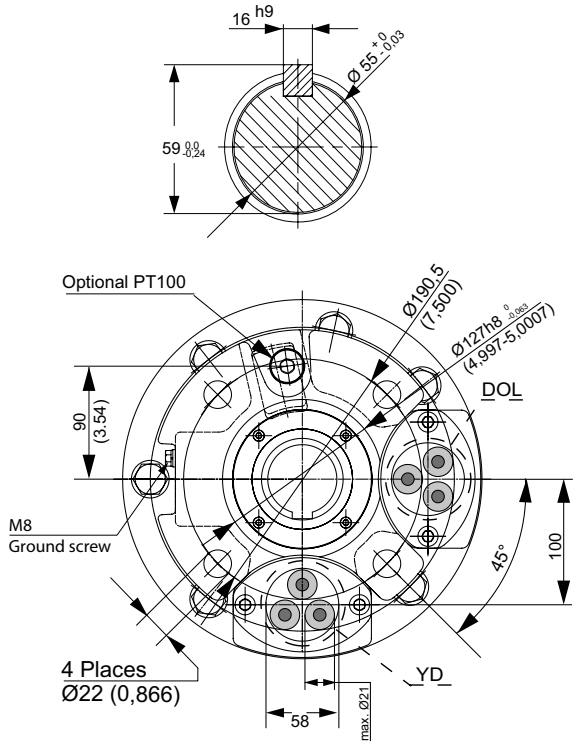

Motor Box

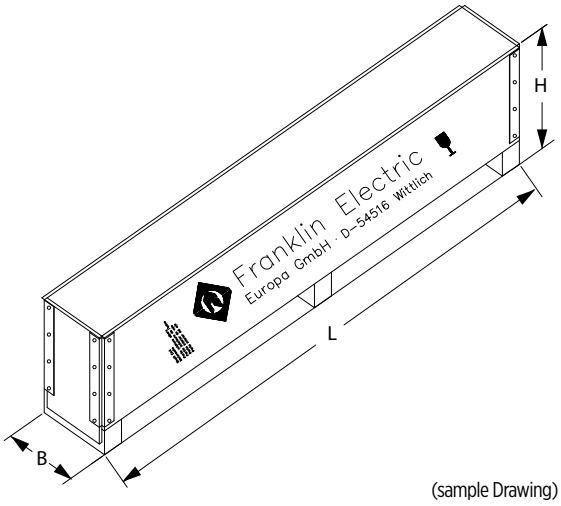

(sample Drawing)

P_N [kW]	Motor Lengths	Motor Weights		Motor Shipping Size [mm]		
	L [mm]	Motor [kg]	incl. Pack [kg]	B	H	L
185	1893	663	743	396	572	2296
220	1893	663	743			
250	1893	663	743			
300	2043	726	806	396	572	2596
350	2143	769	849			
400	2193	794	874			

Franklin Electric

SubMonitor
Motor Protection

The SubMonitor is designed to protect 3-phase pumps with horsepower ratings between 3 and 200 Hp. Current, voltage and motor temperature are monitored using three integrated current transformers. A digital display provides current and voltage readings for all three legs and allows the user to set up the SubMonitor quickly and easily. The SubMonitor is the latest innovation in 3-phase pump protection from Franklin Electric. Using state-of-the-art technology, the SubMonitor provides the ultimate protection for a pump and motor. There is simply no better way to protect a large 3-phase submersible pump investment than with a SubMonitor. It's the protection device that can sense overheating straight from the motor windings! And it is made by the world leader in submersible motors - Franklin Electric.

Model number	
Premium Package	586 000 5100
Input Voltage	190 – 600 VAC
Frquency	60/50 Hz
Motor Service Factor Amps	3 to 359 Amps
Maximum Conductor Size Through Sensors	
Max. Diameter	0.920 in. (23 mm)
Trip Response	
Motor, Under / Overload, Under / Overvoltage, Overheat Unbalance	3 seconds
Control Circuit Rating	1.5 Amp AC, up to 600 volts
Signal Circuit Rating	1 Amp AC, up to 250 volts (Incandescent: 100 watts max.)
Wiring Terminals	
Wire Gauge	#12 to #18 AWG
Tighten to	4.5 in-lbs
Weight (SubMonitor)	2,75 kg
Carton Size (Std. Unit)	7,75 in x 11,5 in x 6,75 in (197 mm x 292 mm x 171 mm)
Shipping Weight (Std. Unit)	3,1 kg

Product advantages:

- Quick setup to monitor a motor, simply enter the Line Frequency (Hz), Line Voltage (volts), and Motor Service Factor Amp rating
- Digital display indicates voltage and current on all three legs at the same time, and fault messages are in easily understandable text
- Monitors - Under/Overload; Under/Overvoltage; Current Unbalance; Overheated Motor (Submonitor Equipped); False Start (Chattering); Phase Reversal
- For motors with service factor amp ratings between 3 and 359 amps
- One unit covers the entire range from 190 to 600 Volts
- No need to make additional turns around the CT or add external CTs
- Password Protection Option
- DIN Rail Mounting Option
- Stores fault, setting changes, and pump run-time, that can be accessed through the display
- the lightning protection is already included in the Premium Package
- Detachable NEMA 3R display unit can be mounted on panel door
- UL 508 Listed

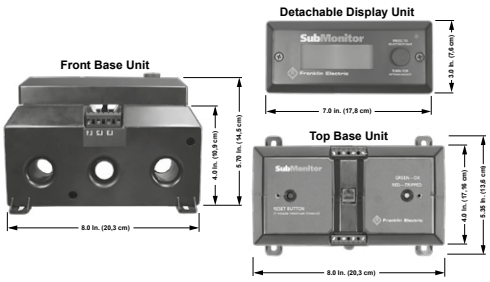

SubMonitor Accessory

D3 Data Download Tool

D3 is a service tool that provides the capability to download data from SubMonitor and transfer that data to a PC.

Includes:

- D3 unit
- Transfer software
- USB cable

Part Nb.: 585 001 1100

ACCESSORIES SUBMERSIBLE MOTORS

SUBSTARTSC® PSC Submersible Motor Starter

The SubStartSC® range covers all PSC motors from 0.25kW to 2.2kW for all voltages. Ergonomic design, attention to detail and unique features make the SubStartSC® motor starter range your first choice when considering submersible motor protection. In conjunction with Franklin Electric submersible motors you now have an tangible water system advantage resulting in ease of installation and reliable protection.

- Attention to detail – every aspect engineered for the application.
- The complete package – The device is 100% compatible with the motor characteristics
- All in one name – Reliability backed by the leader in submersible motors

Ergonomically designed

Mounting	Easy wall mounting without destroying the protection rating of the enclosure.
Wiring	Sufficient space is provided for ease of wiring.
Enclosure	
Protection	IP54
Material	PVC / Polycarbonat
Components	
ON/OFF switch	Illuminated integral ON/OFF switch for ease of power
Circuit breaker	Thermal circuit breaker for protection of the motor.
Capacitor	High quality motor run capacitor for long life
Terminal board	Terminal board suitable for ease of reliable connections
Cable glands	Cable glands to ensure IP54 rating

Specifications

Mechanical	
Protection level	IP54
Mounting	Wall mounting (mounting hardware provided)
Temperature	-5°C - +40°C
Humidity	50% at 55°C (without condensation)
Electrical	
Voltage	220 - 240V; - 6 / +10 %; 50Hz single phase
Current	2,2 - 16 A
Power	0,25 - 2,2 kW
Standards	
IEC 60439-1	

Model Parameters

Part Number[1]	Type[2]	Motor rating [kw]	Nominal Current[3] [A]	Maximal expected current[4] [A]	Capacitor [µF] 450V ac
284 623 3510	SS025SC	0,25	2,4	9,4	12,5
284 624 3510	SS037SC	0,37	3,3	12,6	16
284 625 3510	SS055SC	0,55	4,3	17,7	20
284 626 3510	SS075SC	0,75	5,7	22,7	35
284 627 3510	SS110SC	1,10	8,4	33,9	40
284 628 3510	SS150SC	1,50	10,7	41,7	50
284 629 3510	SS220SC	2,20	14,7	61,8	70

Notes:

1. Can be used with both 220-230V and 230-240V PSC motor ranges.
2. Type indicates motor power rating and motor type.
3. Nominal supply current at nominal voltage
4. Motor starting current under nominal conditions

Dimension

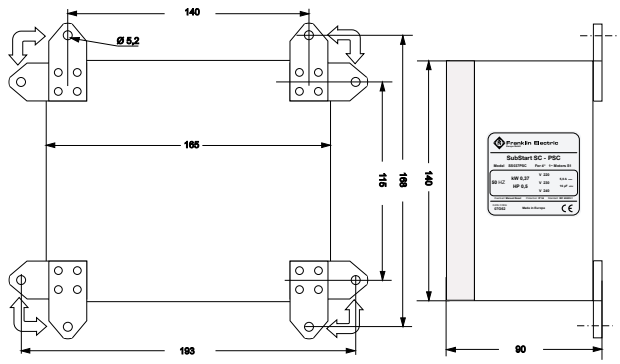

Rating [kW]	SubStartSC 1- PSC			Packing dimensions			Weight [kg]
	B [mm]	H [mm]	T [mm]	B [mm]	H [mm]	T [mm]	
0,25 - 2,2	165	140	82	240	180	100	1,4

ACCESSORIES SUBMERSIBLE MOTORS

SubStartSC® Spare parts

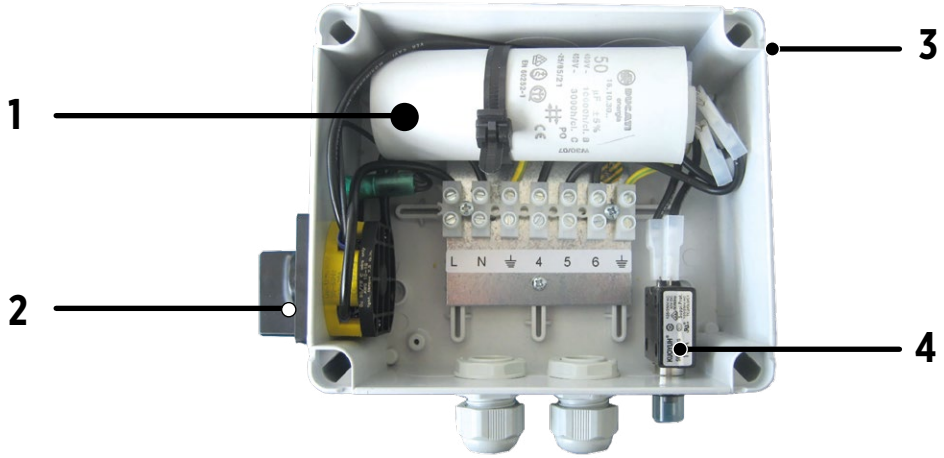

Part 1: Capacitor Kit

Rating [kw]	Mod. Nb.		µF
0,25	308 005 801	-	12,5
0,37	308 005 802	-	16
0,55	308 005 803	-	20
0,75	308 005 804	-	35
1,1	308 005 805	-	40
1,5	308 005 806	-	50
2,2	308 005 807	-	70

Part 4: Overload Kit

Rating [kw]	Mod. Nb.		Amp
0,25	308 005 811	-	3
0,37	308 005 812	-	5
0,55	308 005 813	-	6
0,75	308 005 814	-	8
1,1	308 005 815	-	10
1,5	308 005 816	-	13
2,2	308 005 817	-	18

Part 2: Rotary- Switch Kit

Mod. Nb.
308 005 822

Part 3: Rocker- Switch Kit

Mod. Nb.
308 005 821

ACCESSORIES SUBMERSIBLE MOTORS

SUBSTART3P® Three phase Submersible Motor Starter

The SubStart3P® range covers all 3 phase motors from 0.37kW to 7,5kW. Ergonomic design, attention to detail and unique features make the SubStart3P® motor starter range your first choice when considering submersible motor protection. In conjunction with Franklin Electric submersible motors you now have an tangible water system advantage resulting in ease of installation and reliable protection

- Attention to detail – every aspect engineered for the application.
- The complete package – The device is 100% compatible with the motor characteristics
- All in one name – Reliability backed by the leader in submersible motors

Ergonomically designed

Mounting	Easy wall mounting without destroying the protection rating of the enclosure.
Wiring	Sufficient space is provided for ease of wiring.
Enclosure	
Protection	IP54
Material	PVC / Polycarbonate
Components	
ON/OFF Switch	Manual motor starter switch
Circuit breaker	Integrated thermal and magnetic overload protection
Auxiliary relay	Powered auxiliary contactor for use with external switches
Cable glands	Ensure IP54 rating

Specifications

Electrical Specifications	
Working Voltage	3- / 50Hz 380 - 415V / -10% +6%
Voltage tolerance	380V -10% / 415V+6%
Rated insulation voltage	400 Vac
Rated short-time withstand current	50 kA
Rated conditional short-circuit current	50 kA
Current	5A, 9A, 16 A
Power	0,37kW - 7,5kW
Standards	
IEC/EN 61439 - 1 : 2010	

Model Parameters

Motor Rating [kW]	Type 3~ 400V 50Hz	Model Number	Nom. Current [A]	Starting Current [A]
0,37	SS037P3	288 500 3510	1,1	5,4
0,55	SS055P3	288 501 3510	1,6	7,4
0,75	SS075P3	288 502 3510	2	10,6
1,10	SS110P3	288 503 3510	2,8	16
1,50	SS150P3	288 504 3510	3,9	20,7
2,20	SS220P3	288 505 3510	5,5	29,8
3,0	SS300P3	288 506 3510	7,5	42
3,7	SS370P3	288 507 3510	9	52,3
4,0	SS400P3	288 508 3510	9,9	57
5,5	SS550P3	288 509 3510	12,6	77,2
7,5	SS750P3	288 510 3510	17,1	99,3

Dimension

Rating [kW]	SubStart3P H [mm]	SubStart3P B [mm]	SubStart3P T [mm]	Packing dimensions H [mm]	Packing dimensions B [mm]	Packing dimensions T [mm]	Weight [kg]
0,37kW - 4,0kW	184	190	106	200	250	120	1,2
5,5kW	250	256	140	260	330	160	1.2
7,5kW	250	256	140	260	330	160	2.3

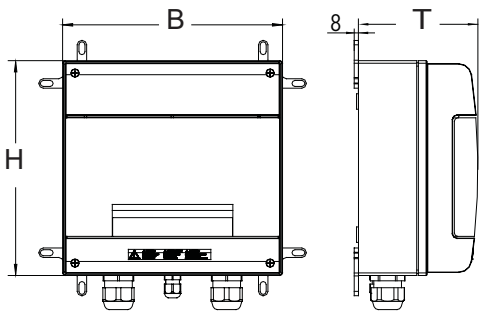

Specifications

Mechanical Specification	
Protection level	IP 54
Environment	This equipment is suitable for environment B according to IEC/EN 61439 - 1 : 2010
Altitude	max 2000m above sea level
Mounting	Wall mounting (mounting hardware provided)
Storage temperature	-25°C to +55°C
Operation temperature	-5°C to +40°C
Humidity	50% at 40°C (without condensation)

ACCESSORIES SUBMERSIBLE MOTORS

SubStart3P® Spare parts

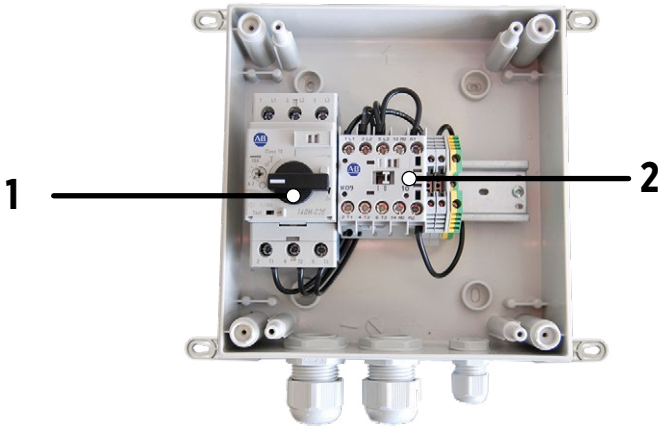

Part 1: Motor Starter

Rating [kw]	Mod. Nb.
0,37	308 027 101
0,55	308 027 102
0,75	308 027 102
1,1	308 027 103
1,5	308 027 104
2,2	308 027 104
3,0	308 027 105
3,7	308 027 105
4,0	308 027 106
5,5	308 027 106
7,5	308 027 107

Part 2: Contactor

Rating [kw]	Mod. Nb.
0,37	308 027 201
0,55	308 027 201
0,75	308 027 201
1,1	308 027 201
1,5	308 027 201
2,2	308 027 202
3,0	308 027 202
3,7	308 027 203
4,0	308 027 203
5,5	308 027 204
7,5	308 027 205

ACCESSORIES SUBMERSIBLE MOTORS

SUBTRONICSC® 1~ PSC Submersible Motor Protection

The SubTronicSC® range covers all PSC motors from 0.25kW to 2.2kW for all voltages. Ergonomic design, attention to detail and unique features make the SubTronicSC® motor starter range your first choice when considering submersible motor protection. In conjunction with Franklin Electric submersible motors you now have an tangible water system advantage resulting in ease of installation and reliable protection.

- Attention to detail – every aspect engineered for the application.
- The complete package – The device is 100% compatible with the motor characteristics
- All in one name – Reliability backed by the leader in submersible motors

Ergonomically designed

Mounting	Easy wall mounting offering various options without destroying the protection rating of the enclosure.
Wiring	Reliable connectors are provided for ease of wiring.
Motor compatible design	
Matching range	The SubTronicSC® Protector range was designed to match the Franklin Electric range of PSC motors.
Wide range of operation	Compatibility with motor design allows for a wide range of operation resulting in minimized nuisance tripping.
Intelligent Protection and Management features	
Dry-run detection (without probes)	Prevents motor and pump damage due to running the pump without water based on a proprietary reliable detection method.
Dry-run auto- reset	Automatic dry-run reset time is based on a proprietary search algorithm to find the best operating point for weak wells. Reset time 6 to 60 minutes.
Over & Under voltage	Prevents motor damage that may be caused by abnormal voltage conditions without limiting the range of operation, made possible by matching the design of the SubTronicSC® Protector with the motor. Reset time approximately 3 minutes.
Over current protection	Prevents operation under conditions where motor current may exceed safe levels due to bound pump or other fault condition. Detection is based on current heating capacity measurement to prevent unnecessary nuisance tripping. Reset time approximately 10 minutes.
Faulty Start Protection	Prevents system damage due to factors such as faulty contacts or switch. Contact failure detection reacts fast and will prevent damage to system components.
Rapid Cycle Protection	Prevents system damage due to factors such as continuous rapid cycling and excessive motor thermal cycling caused by waterlogged tank, faulty contacts or faulty pressure switch.
Indicators	
Status	Indication shows normal operation or other condition.
Voltage	Faulty voltage condition is indicated.
Fault conditions	Dry-run, Over current, Rapid Cycling, and Faulty start are indicated.

Model Parameters

Part Number	Type	Motor rating [kw]	Nominal Current [A]	Maximal expected current [A]	Capacitor [µF] 450V ac
284 623 3511	ST025PSC	0,25	2,4	9,4	12,5
284 624 3511	ST037PSC	0,37	3,3	12,6	16
284 625 3511	ST055PSC	0,55	4,3	17,7	20
284 626 3511	ST075PSC	0,75	5,7	22,7	35
284 627 3511	ST110PSC	1,10	8,4	33,9	40
284 628 3511	ST150PSC	1,50	10,7	41,7	50
284 629 3511	ST220PSC	2,20	14,7	61,8	70

Specifications

Mechanical	
Protection level	IP54
Mounting	Wall mounting (with options)
Temperature	-5°C - +40°C
Humidity	50% at 55°C (without condensation)
Electrical	
Voltage	220 - 240V; ± 10 %; 50Hz single phase
Current	16 A
Power	0,25 - 2,2 kW
Standards	
IEC 60439-1 when supplied with suitably fused supply.	

Dimension

Rating [kW]	SubTronicSC 1~ PSC			Packing dimensions			Weight [kg]
	B [mm]	H [mm]	T [mm]	B [mm]	H [mm]	T [mm]	
0,25 - 2,2	180	230	82	200	290	100	1,4

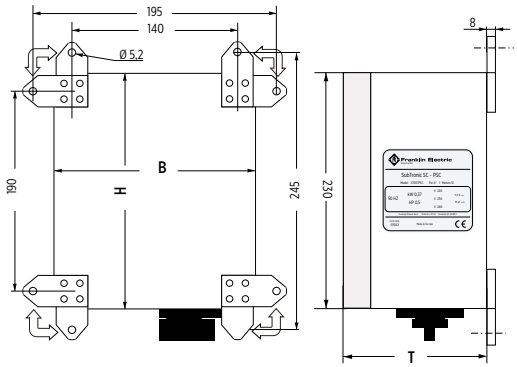

ACCESSORIES SUBMERSIBLE MOTORS

SubTronicSC® Spare parts

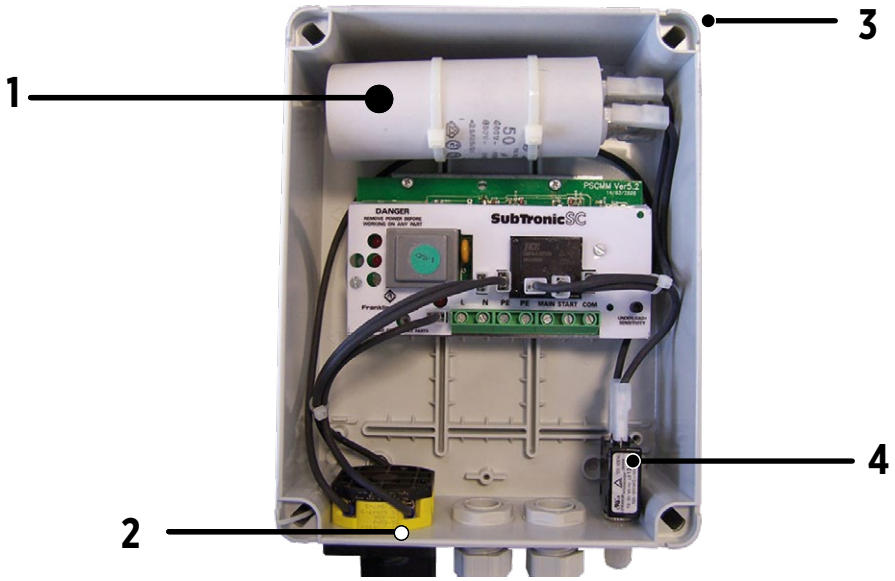

Part 1: Capacitor Kit

Rating [kw]	Mod. Nb.		µF
0,25	308 005 801	-	12,5
0,37	308 005 802	-	16
0,55	308 005 803	-	20
0,75	308 005 804	-	35
1,1	308 005 805	-	40
1,5	308 005 806	-	50
2,2	308 005 807	-	70

Part 4: Overload Kit

Rating [kw]	Mod. Nb.		Amp
0,25	308 005 811	-	3
0,37	308 005 812	-	5
0,55	308 005 813	-	6
0,75	308 005 814	-	8
1,1	308 005 815	-	10
1,5	308 005 816	-	13
2,2	308 005 817	-	18

Part 2: Rotary- Switch Kit

Mod. Nb.
308 005 822

Part 3: Rocker- Switch Kit

Mod. Nb.
308 005 821

ACCESSORIES SUBMERSIBLE MOTORS

SUBTRONIC3P® Three phase Submersible Motor Protection

The SubTronic3P® range covers all 4 inch 3 phase motors from 0.37kW to 7,5kW. Ergonomic design, attention to detail and unique features make the SubTronic3P® range your first choice when considering submersible motor protection and management. Together with Franklin Electric submersible motors you have an undisputable advantage, resulting in ease of installation, sophisticated system management and peace of mind.

Ergonomically designed

Mounting	Easy wall mounting offering various options without destroying the protection rating of the enclosure.
Wiring	Reliable connectors are provided for ease of wiring.
Motor compatible design	
Matching range	The SubTronic3P® Protector range was designed to match the Franklin Electric range of 3 phase motors.
Wide range of operation	Compatibility with motor design allows for a wide range of operation resulting in minimized nuisance tripping.
Intelligent Protection and Management features	
Dry-run detection (without probes)	Prevents motor and pump damage due to running the pump without water based on a proprietary reliable detection method.
Dry-run auto- reset	Automatic dry-run reset time is based on a proprietary search algorithm to find the best operating point for weak wells. Reset time in max. 60 minutes.
Over & Under voltage	Prevents motor damage that may be caused by abnormal voltage conditions without limiting the range of operation, made possible by matching the design of the SubTronic3P® Protector with the motor. Reset time approximately 3 minutes.
Over current protection	Prevents operation under conditions where motor current may exceed safe levels due to bound pump or other fault condition. Detection is based on current heating capacity measurement to prevent unnecessary nuisance tripping. Auto-reset in 15 minutes. Manual reset possible in approximately 5 minutes by reapplying power.
Rapid Cycle Protection	Prevents system damage due to factors such as continuous rapid cycling and excessive motor thermal cycling caused by waterlogged tank, faulty contacts or faulty pressure switch. Auto-reset in 5 minutes if condition clears. Manual reset possible in approximately 5 minutes by reapplying power.
Indicators	
Status	Indication shows normal operation or other condition.
Voltage	Faulty voltage condition is indicated.
Fault conditions	Dry-run, Over Current, Rapid Cycling, Over Voltage and Under Voltage are indicated.

Dimension

Leistung [kW]	SubTronic3P H [mm]	SubTronic3P B [mm]	SubTronic3P T [mm]	Packing dimensions H [mm]	Packing dimensions B [mm]	Packing dimensions T [mm]	Weight [kg]
0,37kW - 4,0kW	184	190	106	200	250	120	1.4
5,5kW - 7,5kW	250	256	140	260	330	160	2.8

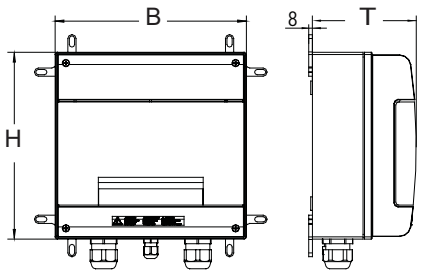

Specifications

Mechanical Specification	
Protection level	IP 54
Environment	This equipment is suitable for environment B according to IEC/EN 61439 - 1 : 2010
Altitude	max 2000m above sea level
Mounting	Wall mounting (mounting hardware provided)
Storage temperature	-25°C to +55°C
Operation temperature	-5°C to +40°C
Humidity	50% at 40°C (without condensation)
Electrical Specifications	
Rated Voltage	3~ / 50Hz 380 - 415V
Voltage tolerance	380V -10% / 415V+6%
Rated insulation voltage	400 Vac
Rated short-time withstand current	50 kA
Rated conditional short-circuit current	50 kA
Current	5 A ; 9 A ; 25 A
Power	0,37 - 7,5kW
Standards	
IEC/EN 61439 - 1 : 2010	

Model Parameters

Motor Rating [kW]	Type 3 phase / 400V 50Hz	Model Number	Nom. Current [A]	Max. Current [A]
0,37	ST037P3	288 500 3511	1,1	5,4
0,55	ST055P3	288 501 3511	1,6	7,4
0,75	ST075P3	288 502 3511	2	10,6
1,10	ST110P3	288 503 3511	2,8	16
1,50	ST150P3	288 504 3511	3,9	20,7
2,20	ST220P3	288 505 3511	5,5	29,8
3	ST300P3	288 506 3511	7,5	42
3,7	ST370P3	288 507 3511	9	52,3
4	ST400P3	288 508 3511	9,9	57
5,5	ST550P3	288 509 3511	12,6	77,2
7,5	ST750P3	288 510 3511	17,1	99,3

ACCESSORIES SUBMERSIBLE MOTORS

SubTronic3P® Spare parts

0,37kW - 3,0kW	3,7kW - 7,5kW

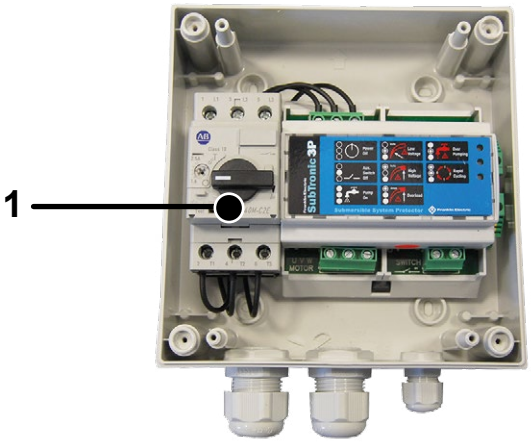

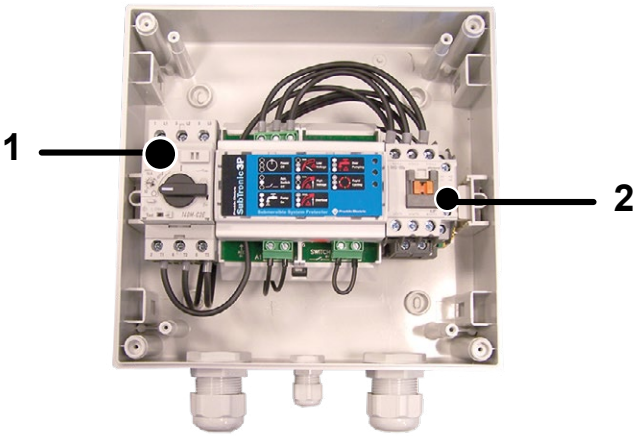

Part 1: Motor Starter

Rating [kW]	Mod. Nb.
0,37	308 027 101
0,55	308 027 102
0,75	308 027 102
1,1	308 027 103
1,5	308 027 104
2,2	308 027 104
3,0	308 027 105
3,7	308 027 105
4,0	308 027 106
5,5	308 027 106
7,5	308 027 107

Part 2: Contactor - > 3,7 kW

Rating [kW]	Mod. Nb.
0,37	-
0,55	-
0,75	-
1,1	-
1,5	-
2,2	-
3,0	-
3,7	308 027 206
4,0	308 027 206
5,5	308 027 204
7,5	308 027 205

ACCESSORIES SUBMERSIBLE MOTORS

1~ 3- WIRE MOTOR CONTROL BOXES

Application: Control and Protection of Franklin Electric 3-wire single phase motors.

Specification:

- 50 Hz - 220 / 230V
- 60Hz - 115 / 230V
- Degree of protection: IP 23
- Metal version
- Includes starting capacitor
- Manual reset overload
- Max. Amb Temp. -20°C - +40°C

ORDERING INFORMATION 50 HZ

3-wire Motors 50 Hz		Control Box 50 Hz	Weights
[kW]	[V]	Mod. Nummer	[kg]
0,25	220 / 230	280 355 2115	1,8
0,37			
0,55	220 / 230	280 357 2115	
0,75	220 / 230	280 358 2115	
1,1	220 / 230	282 350 8114	2,3
1,5	220 / 230	282 351 8114	
2,2	220 / 230	282 352 8114	3,2
3,7	220 / 230	282 253 4014	5,1

SPARE PARTS CONTROL BOXES 50 HZ

P_N [kW]	Control Box Model number	Relay-Kit	Qty.	Start Capacitor	Qty.	Run Capacitor	Qty.	Overload relay of main phases	Qty.	Overload relay of start phases	Qty.
0,37	2803552115	305213912	1	305218957 **48µF 220V**	1	---------	0	*	1	---------	0
0,55	2803572115	305213912	1	305218906 **65µF 220V**	1	---------	0	*	1	---------	0
0,75	2803582115	305213912	1	305218918 **95µF 220V**	1	---------	0	*	1	---------	0
1,1	2823508114	305213912	1	305207913 **115µ220V**	1	305 204 902 **10µF 370V**	1	305 215 914	1	---------	0
1,5	2823518114	305213912	1	305208915 **208µF 220V**	1	305 204 903 **20µF 370V**	1	305 215 902	1	305 215 906	1
2,2	2823528114	305213912	1	305208919 **300µF 220V**	**1**	305 203 902 **35µF 370V**	**1**	305 215 915	1	305 215 918	1
3,7	2822534014	305213912	1	305208915 **208µF 220V**	2	305 203 909 **45µF 370V**	1	305 214 902	1	305 215 902	1
						305 203 901 **30µF 370V**	1				

ACCESSORIES SUBMERSIBLE MOTORS

ORDERING INFORMATION 60HZ

3-wire Motors 60 Hz		Control Box 60 Hz	Weights
[kW]	[V]	Mod. Number	[kg]
0,44	115	280 102 4915	1,8
	230	280 103 4915	
0,59	115	280 104 4915	
	230	280 105 4915	
0,83	230	280 107 4915	
1,0	230	280 108 4915	
1,4	230	282 300 8110	2,3
1,8	230	282 301 8110	
2,5	230	282 302 8110	3,2
4,2	230	282 113 8110	5,1

SPARE PARTS CONTROL BOXES 60 HZ

P_N [kW]	Voltage [V]	Control Box Model number	Relay-Kit	Qty.	Start Capacitor	Qty.	Run Capacitor	Qty.	Overload relay of main phases	Qty.	Overload relay of start phases	Qty.
0,44	115	280 102 4915	305 101 905	1	305 207 905 159-191µF 110V	1	-	0	-	0	-	0
	230	280 103 4915	305 101 901	1	305 207 905 43-53µF 220V	1						
0,59	115	280 104 4915	305 101 906	1	305 207 951 250-300µF 125V	1	-	0	-	0	-	0
	230	280 105 4915	305 101 902	1	305 207 905 59-71µF 220V	1						
0,83	230	280 107 4915	305 101 903	1	305 207 918 86-103µF 220V	1	-	0	-	0	-	0
1,0	230	280 108 4915	305 101 904	1	305 207 913 105-126µF 220V	1	-	0	-	0	-	0
1,4	230	282 300 8110	155 031 102	1	305 207 937 105-126µF 220V	1	155 328 101 15µF 370V	1	275 411 113	1	275 411 114	1
1,8	230	282 301 8110	155 031 102	1	305 207 937 105-126µF 220V	1	155 328 103 20µF 370V	1	275 411 113	1	275 411 117	1
2,5	230	282 302 8110	155 031 102	1	305 206 923 208-250µF 220V	1	155 327 109 45µF 370V	1	275 411 115	1	275 411 118	1
4,2	230	282 113 8110	155 031 601	1	275 468 118 216-259µF 330V	1	155 327 114 40µF 370V	1	275 406 102	1	275 411 119	1

DIMENSION CONTROL BOXES [mm]

0,25 (0,44) – 0,75 (1,0) kW			1,1 (1,4) kW / 1,5(1,8) kW / 2,2(2,5) kW			3,7 (4,2) kW		
A	B	C	A	B	C	A	B	C
125	215	68	205	216	154	205	384	154

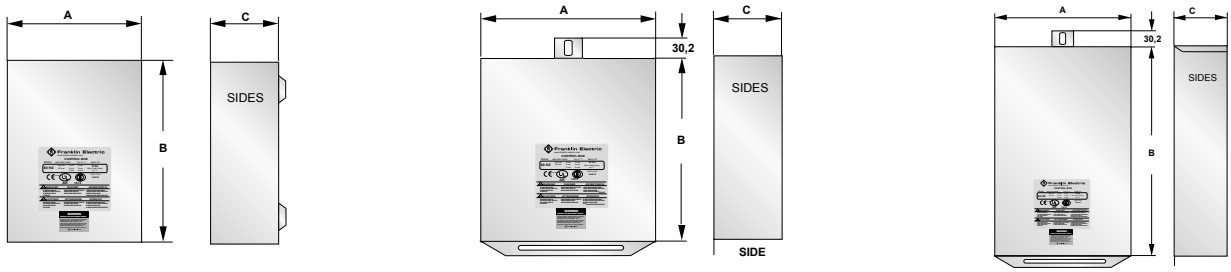

ACCESSORIES SUBMERSIBLE MOTORS

DOUBLE PLUG LEAD 4" MOTOR DESIGN

4" Lead Termination Kit

This proven, sturdy solution is your choice of cable joining in temporary pump applications or when re-usage of the drop cable is desired. Furthermore, the flexibility and safety it provides for field service conditions makes it the preferred choice over conventional, not breakable splicing kits.

Technical Description:

- Max. current 18 Ampere in air @ max. 50°C ambient temperature
- Max. current 23 Ampere submersed in water @ max. 30°C ambient temperature
- Max. voltage 750 V

Kit- Type	Mod. Number	Description	Material Cable plug
Standard 304SS	308 090 901	w/o Strain relief	Brass
Strain Relief 304SS	308 090 902	with. Strain relief	Brass

DOUBLE PLUG LEAD 4" MOTOR DESIGN

- Connected between termination kit and 4" motor, required for use of lead termination kit.
- Max. current: 18 Ampere in air at max. 50 °C ambient temperature, 23 Ampere submersed in water at max. 30 °C ambient temperature
- Max. voltage: 750 V AC

Model no. **2- wire Motors**	Material	Description:	Model no. **PSC / 3-wire/ 3-Phase Motors**	Material	Description
310 131 001	304SS	3X1,5 mm² 1,5 m - w/o. Strain relief	310 111 401	304SS	3x1.5 / 1G 1.5 mm² 1.50 m - w/o strain relief
310 131 501	316SS		310 111 501	316SS	
310 131 002	304SS	3X1,5 mm² 2,5 m - w/o Strain relief	310 111 402	304SS	3x1.5 / 1G 1.5 mm² 2.50 m - w/o strain relief
310 131 502	316SS		310 111 502	316SS	
310 132 001	304SS	3X1,5 mm² 1,5 m - with. Strain relief(Brass)	310 112 001	304SS	3x1.5 / 1G 1.5 mm² 1.50 m - with strain relief(Brass)
-	316SS		-	316SS	
310 132 002	304SS	3X1,5 mm² 2,5 m - with. Strain relief(Brass)	310 112 002	304SS	3x1.5 / 1G 1.5 mm² 2.50 m - with strain relief(Brass)
	316SS		-	316SS	

4" Motor Design with round lead plug 9.3kW

L (m)	Mat.	Mod. No.	3-Phase
1,5	316SS	**309 116 501**	3X1,5 & 1G1,5mm² 1,5 m - w/o. Strain relief
2,5	316SS	**309 116 502**	

ACCESSORIES SUBMERSIBLE MOTORS

Lead Splicing Kit up to 95 MM²

- Connection kit for cable extensions with cable connection sleeves for cable cross-sections up to 95 mm².
- Suitable for all common cable materials
- Long service life
- High electrical insulation values and mechanical strength
- Quick and easy assembly
- Components: Transparent plastic shell, ready-to-mix casting resin, insulating tape, installation instructions

Tech. Description	Mod. Nb.	Description	for cross-sections up to [mm²]	L [mm]	Ø [mm]	H [mm]	Max. cable Ø [mm]
• 4 wire • up to 95mm² • up to 1,2kV	308 090 930	Splicing Kit 10	1.5 - 10	190	36	50	26
	308 090 931	Splicing Kit 25	10 - 25	260	47	63	34
	308 090 932	Splicing Kit 50	25 - 50	360	55	75	43
	308 090 933	Splicing Kit 95	50 - 95	400	70	95	48

CORROSION PROTECTION 4" MOTORS

Description	Model no.	
■ For use in more aggressive media ■ Mounting on the bottom of the motors ■ Material: GG 25 System of operation: Wells with extremely high levels of chlorides and other elements combined with high temperatures will attack almost any type of metal, including stainless steel. When in contact with a more noble metal, the less noble metal becomes the anode of a galvanic cell. Oxidation occurs at the anode. It slowly dissolves (sacrificial anode), leaving the more noble metal unaffected. The result is a longer service life of the motor/pump unit in more aggressive media.	4000 N: 308 250 912 Design up to 06.2016 4000 N: 308 250 914 Design staring 07.2016 6500 N: 308 250 913	

MOTOR FILLING LIQUID

Description	FES92	FES91	FES93
5 l motor filling liquid FES92 model no. 308 353 941 	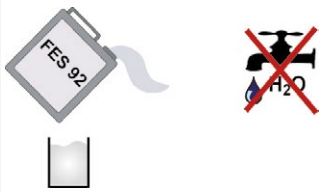	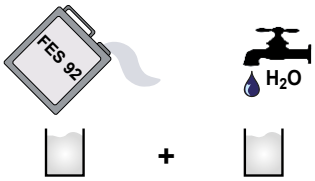	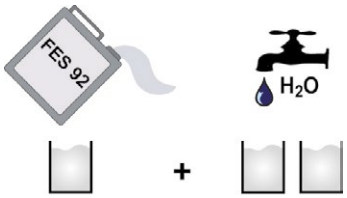

motor type	required motor filling
4" encapsulated motor Standard / PM motor	FES93
6" encapsulated Standard / PM motor	FES91
6" encapsulated High Temp motor	FES92

motor type	required motor filling
8" encapsulated Standard motor	FES91
8" encapsulated High Temp 75 motor	FES92
6"/8"/10"/12" rewindable Standard / PM Rew motors	FES93

MOTOR FILLING KIT

Description	Model no.	
This kit contains all necessary tools to check and replenish Franklin Electric sub-mersible motors (up 4" High Thrust 6500N) with filling liquid FES 91 /92 / 93 (fill solution/concentrate must be ordered separately).	308 726 103	

ACCESSORIES SUBMERSIBLE MOTORS

MOTOR/PUMP COUPLINGS

- Motor-pump couplings for matching Franklin Electric motors to a variety of pump shafts.
- Couplings are designed to transmit the pump thrust to the motor in order to provide maximum benefits from the Franklin internal thrust bearing construction.
- Hardened Stainless steel spacer discs in the 4" and 6" couplings assure positive bearing between motor and pump shafts and assure full support for downward thrust created by the pump. (8" couplings DO NOT contain hardened spacer discs, since the motor shaft itself is hardened.)

4" Motor/pump couplings

Description	Dimensions
■ 4" motor/pump coupling ■ NEMA Standard measuring on motor shaft ■ separate washer between motor and pump shafts ■ Material: 304SS / 316SS	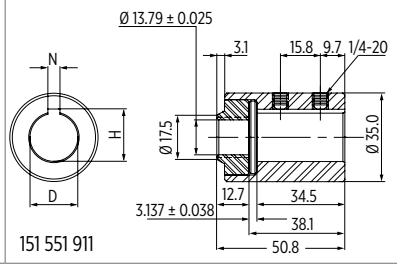 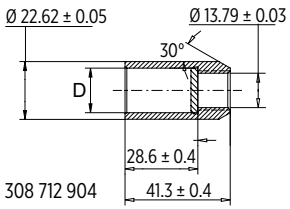 

Model no.	Coupling Material DIN (AISI)	Dimension D [mm] Max. / Min.	Dimension N [mm] Max. / Min.	Dimension H [mm] Max. / Min.
151 551 911	304SS	19.075 / 19.063	4.838 / 4.788	20.70 / 20.53
308 712 904	316SS	17.50 / 17.48		

6" Motor/pump couplings

Description	Dimensions
■ 6" motor/pump coupling ■ NEMA Standard measuring on motor shaft ■ separate washer between motor and pump shafts ■ Material: 304SS / 316SS	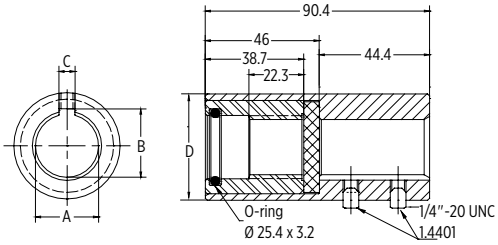 

Model no.	Coupling Material DIN (AISI)	Dimension A [mm] Max. / Min.	Dimension B [mm] Max. / Min.	Dimension C [mm] Max. / Min.	Dimension D [mm]
151 935 902	1.4005 (304SS)	19,07 / 19,06	20,70 / 20,52	4,84 / 4,79	43,0
151 935 922	1.4401 (316SS)				
151 935 910	1.4005 (304SS)	20,02/ 20,01	22,76 / 22,60	6,05 / 6,00	43,0
151 935 927	1.4401 (316SS)				
151 935 908	1.4005 (304SS)	22,02/ 22,01	25,53 / 25,32	8,03 / 7,98	43,0
151 935 928	1.4401 (316SS)				
151 935 901	1.4005 (304SS)	22,25 / 22,24	24,54 / 24,36	6,43 / 6,38	43,0
151 935 921	1.4401 (316SS)				
151 935 906	1.4005 (304SS)	25,02 / 25,01	28,70 / 28,30	8,03 / 7,98	43,0
151 935 926	1.4401 (316SS)				
151 935 909	1.4005 (304SS)	25,42 / 25,41	27,74 / 27,56	6,43 / 6,38	43,0
151 935 929	1.4401 (316SS)				

ACCESSORIES SUBMERSIBLE MOTORS

8" Motor/pump couplings

Description	Dimensions
▪ Material: 304SS / 316SS ▪ NEMA standard measuring on motor shaft ▪ Separation washer between motor and pump shaft	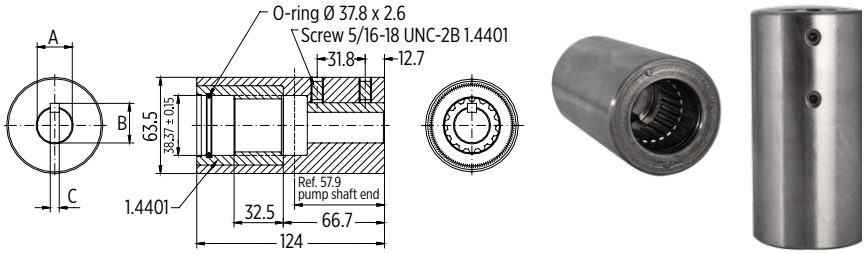

Model no.	Coupling Material DIN (AISI)	Dimension A [mm] Max. / Min.	Dimension B [mm] Max. / Min.	Dimension C [mm] Max. / Min.
156 563 901	1.4005 (304SS)	25.425 / 25.413	28.27 / 28.17	6.38 / 6.32
156 563 921	1.4404 (316SS)			
156 563 902	1.4005 (304SS)	30.188 / 30.175	33.73 / 33.63	7.96 / 7.91
156 563 922	1.4404 (316SS)			
156 563 903	1.4005 (304SS)	31.775 / 31.763	35.36 / 35.26	7.96 / 7.91
156 563 923	1.4404 (316SS)	38.125 / 38.113		
156 563 904	1.4005 (304SS)	38.125 / 38.113	42.37 / 42.27	9.55 / 9.50
156 563 924	1.4404 (316SS)	38.125 / 38.113		
156 563 905	1.4005 (304SS)	19.085 / 19.063	20.70 / 20.52	4.84 / 4.79
156 563 906	1.4005 (304SS)	30.188 / 30.175	33.02 / 32.92	6.38 / 6.32
156 563 926	1.4404 (316SS)	30.188 / 30.175	33.02 / 32.92	6.38 / 6.32
156 563 907	1.4005 (304SS)	22.250 / 22.238	24.54 / 24.36	6.43 / 6.38
156 563 908	1.4005 (304SS)	22.024 / 22.011	25.53 / 25.32	8.03 / 7.98
156 563 931	1.4404 (316SS)			
156 563 929	1.4404 (316SS)	42.888 / 42.850	47.12 / 47.04	9.55 / 9.50

ACCESSORIES SUBMERSIBLE MOTORS

PT 100 SENSOR - 6"/8"ENCAPSULATED MOTORS (STANDARD & PM)

The PT100 is a precision platinum wire resistor that is specifi as a temperature input for process control equipment. The sensor is inserted in a adapter screw and is equipped with a 10m/20m/30m or 50m cable, i.e. an additional cable/extension may be required (to be provided by the customer).

PT100 sensor retrofit kits from Franklin Electric come with complete instructions and allow for easy field installation.

The PT100 is not a motor overload protector, which means the warranty will be voided if a separate motor protector is not installed as required by the Franklin Electric Installation Manual. (Franklin Electric does not offer control units for the PT100!)

PT 100 SENSOR - 6"/8" CT STANDARD MOTORS PARTS AND SETTINGS

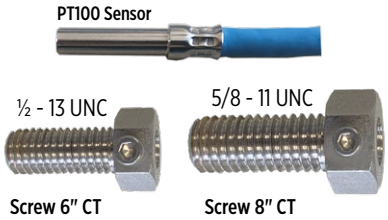

Tightening torque PT 100 screw :	SW	PT 100 Sensor Typ	
	19 mm	6" PT100 - 4kW- 45kW	54- 61 Nm
	24 mm	8" PT100 - 30kW- 45kW	54- 61 Nm
		55kW- 150kW	115- 122 Nm
Tightening torque PT 100 Inbus-screw M4 :	**SW**		
	3 mm	3 - 4 Nm	

Standard Motors setting values PT100 controller

Conditions	Temp. of the water without motor operation	Max. Trip temp. / Resistance Setting (for standard Lead lenght)
Motor operating at nameplate output with 0.16 m/sec flow past the motor	10°C	40°C / 115,5 Ω
	15°C	44°C / 117,0 Ω
	20°C	48°C / 118,6 Ω
	25°C	51°C / 119,7 Ω
	30°C	55°C / 121,3 Ω
Motor that has been Derated with 1 m/sec flow past the motor	35°C	59°C / 122,8 Ω
	40°C	63°C / 124,3 Ω
	45°C	66°C / 125,5 Ω
	50°C	70°C / 127,0 Ω
	55°C	74°C / 128,6 Ω
	60°C	78°C / 130,1 Ω

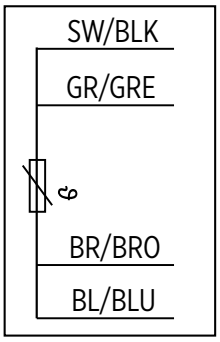

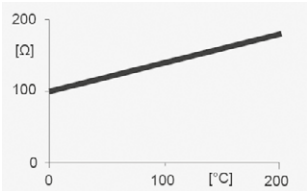

PT 100 SENSOR - 6" CT PM MOTORS SETTINGS

6" CT PM Motor rating [kW]	max. Medium Temp. [°C]	Cooling flow along the motor [m/s]	Max. Trip temp. / Resistance Setting (for standard Lead lenght)
11	30	0,2	47 °C / 121,3 Ω
22	30	0,2	
45	30	0,5	

PT100 SENSOR KIT NUMBERS - 6" CT STANDARD AND PM MOTORS*

Kit Number	Lead length [m]	Motor Type	Wire Insul.	Screw Material	max. Medium Temp.	Lead Ø [mm²]	D [mm]
305 327 951	10	6" all Ratings	Rubber	316SS	60°C	3X0,5	8,5
305 327 952	20						
305 327 953	30						
305 327 954	50						

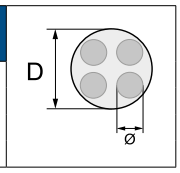

PT100 SENSOR KIT NUMBERS - 8" CT STANDARD MOTORS*

Kit Number	Lead length [m]	Motor Type	Wire Insul.	Screw Material	max. Medium Temp.	Lead [mm²]	D [mm]
305 326 951	10	Motors Type 1 and Motors Typ 2.1	Rubber	316SS	60°C	3X0,5	8,5
305 326 952	20						
305 326 953	30						
305 326 954	50						

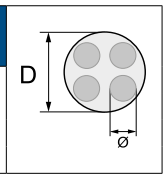

* The PT100 sensor is not a motor overload protector, which means the warranty will be voided if a separate motor protector is not installed as required by the Franklin Electric Application Installation Maintenance Manual (AIM).

ACCESSORIES SUBMERSIBLE MOTORS

PT100 SENSOR - 6"/8" CT HIGHTEMP MOTORS*

Its ohmic resistance is proportional to the sensed temperature. The FE field replaceable PT100 is potted into a screw holding the upper end bell. Because of his remote position relative to the windings, the sensing relay should be adjusted according to the below table.

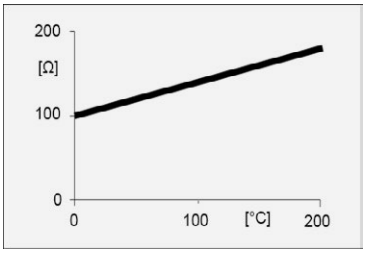

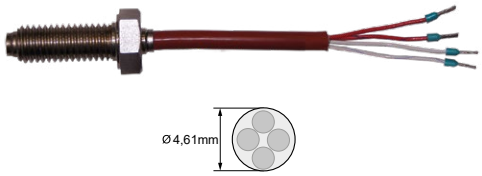

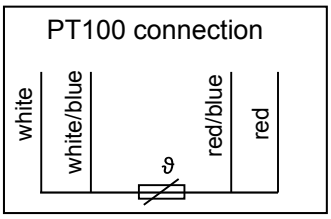

To install the PT100 sensor bolt, remove the top end bell bolt that is opposite of the lead and replace it with the PT100 screw. Tighten the sensor bolt to the torque values shown below.

6" PT100 - 4kW- 30kW 54- 61 Nm
8" PT100 - 30kW- 110kW 115 - 122 Nm

Franklin Electric does not offer the required sensing device, it is available from speciality dealers.

Conditions	Temp. of the water without motor operation	Max. Trip temp. / Resistance Setting
Motor operating at nameplate output with 0.16 m/sec flow past the motor	50°C	60°C
	60°C	70°C
	70°C	80°C
	75°C	85°C
	80°C	90°C
	90°C	100°C

PT100 SENSOR - 6" CT HIGHTEMP 90°C MOTORS*

Kit Number	Motor Type	Wire Insul.	Screw Material	max. Medium Temp.	Lead [mm²]	Lead length [m]
156 098 111K	4 - 30kW	Silicon	1.4571	90°C	4X0,35	10
156 098 112K		Silicon	1.4571	90°C	4X0,35	130

PT100 SENSOR - 8" CT HIGHTEMP 75°C MOTORS*

Kit Number	Motor Type	Wire Insul.	Screw Material	max. Medium Temp.	Lead [mm²]	Lead length [m]
156 098 116K	30 - 110kW (Type 1)	Silicon	1.4571	90°C	4X0,35	10
156 098 117K		Silicon	1.4571	90°C	4X0,35	130

* The PT100 sensor is not a motor overload protector, which means the warranty will be voided if a separate motor protector is not installed as required by the Franklin Electric Application Installation Maintenance Manual (AIM).

ACCESSORIES SUBMERSIBLE MOTORS

PT100 Sensor - 6"/8"/10"/12" Standard Rewindable Motors Standard and PM*

- Fitted into the upper end bell flange , all end bells 6" ,8", 10" and 12" Standard Rewindable Motors are prepare for installation PT100
- Measures the temperature of the filling liquid
- Conductor with a resistance proportional to the temperature
- Allows monitoring the temperature continuously

The above-ground equipment is not available from Franklin Electric and is typically part of a custom panel or data acquisition system. PT100 sensor retrofit kits from Franklin Electric come with complete instructions and allow for easy field installation.

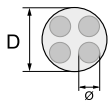

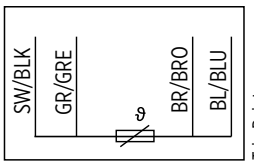

Lead lenght [m]	Ø [mm²]	D [mm]	6" Rew Redesign starting 08.2012		8" / 10" / 12"		Setting Temperature	
			304/316	904L	WW/316	904L	Standard Motors	PM Motors
10	4X0,5	8	308 016 501	308 016 522	308 016 401	308 016 422	PVC = 55°C PE2/PA = 75°C	8" REW PM Motors: 55 °C 10" REW PM Motors: 65 °C
20	4X0,5	8	308 016 502	-	308 016 402	-		
30	4X0,5	8	308 016 503	-	308 016 403	-		
50	4X0,5	8	308 016 505	308 016 526	308 016 405	308 016 426		

*The PT100 is not a motor overload protector, which means the warranty will be voided if a separate motor protector is not installed as required by the Franklin Electric Application Installation Maintenance Manual (AIM)

6" PEMANENT STAR PLUG

For some applications it may be necessary to permanently run a star-delta submersible motor in star connection. This may be achieved by using the PERMANENT-STAR-PLUG . This connector short - circuits all three pins in one of the two motor sockets and is designed to replace one lead.

Part- Nb.: 304- 308 065 901
Part- Nb.: 316SS - 308 065 951

MOTOR/PUMP CONNECTION SCREW KITS

	Motor type	Material	L / L_T [mm]	Thread type	F [mm]	Model no.
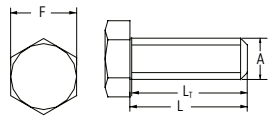	6" CT	316SS	38.1	1/2-20UNF	19	308 659 318
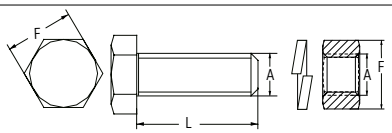	8" / 8" REW	316SS	70	M16	24	308 659 327
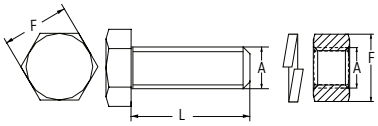	10" / 12" REW	316SS	80	M20	30	308 659 319

ACCESSORIES SUBMERSIBLE MOTORS

COOLING SLEEVE FOR SUBMERSIBLE MOTOR PUMPS

The heat loss generated by the submersible motor must be dissipated to the pumped medium by means of convection. If the minimum cooling speed along the submersible motor cannot be guaranteed, it is mandatory to install a cooling jacket in order to generate sufficient cooling.

To provide cooling, the pump-motor unit is supplemented by a cooling sleeve. This separate „sheet metal jacket“ is sealed above the pump inlet. The pumped medium is thus sucked in from below and directed past the motor in order to dissipate the generated motor heat loss (convection).

Appropriate brackets and inlet strainers are available for horizontal installation in an open body of water, e.g. a tank, a lake or a flowing body of water.

COMPONENTS COOLING SLEEVE KIT

1. Cooling sleeve tube (Stainless steel)
2. Pump sealing ring (EPDM) with drinking water approval
3. Motor spacer
4. Pipe clamps
5. Filter strainer (accessories)
6. Console (accessory for horizontal mounting)

COOLING SLEEVE FOR 4" SUBMERSIBLE MOTOR PUMPS

FE pump type		FE motors		dimensions [mm]	model no. cooling sleeve 304SS**	Accessories	
		type*	P_N [kW]			model no. strainer	model no. support brackets (for horizontal installation)
4"	VS 1, VS 2, VS 3 VS 4, VS 6, VS 7 VS 8, VS 10	4" CT	1- / bis 0.75 3- / bis 1.5	Ø 115 x 400	**309 005 101**	**309 005 161** [Ø 115 mm x 117 mm]	**309 005 601** (Set = 2 pcs.)
			1- / 1.1 - 1.5 3- / 2.2 - 3.0	Ø 115 x 500	**309 005 102**		
			1- / 2.2 3- / 3.7 - 5.5	Ø 115 x 800	**309 005 103**		**309 005 602** (Set = 2 pcs.)
			3- / 7.5	Ø 115 x 1000	**309 005 104**		
	VS 15	4" CT	1- / 2.2 3- / 2.2 - 3.0	Ø 145 x 625	**309 005 105**	**309 005 261** [Ø 145 mm x 158 mm]	**309 005 603** (Set = 2 pcs.)
			3- / 3.7 - 5.5	Ø 145 x 800	**309 005 106**		
			3- / 7.5	Ø 145 x 1000	**309 005 107**		

* CT: encapsulated motors
** 316SS version: "N" added to model no.

DIMENSIONS SUPPORT BRACKETS 4"

support pump

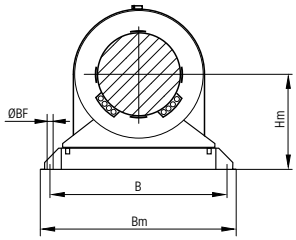

support flow sleeve / motor

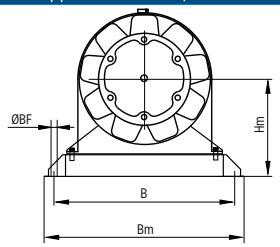

Support brackets model no.	Middle height	Support pump			Support flow sleeve / motor		
	Hm [mm]	B [mm]	Bm [mm]	Ø BF [mm]	B [mm]	Bm [mm]	Ø BF [mm]
309 005 601	100	185	220	11	185	220	11
309 005 602	100	235	275	11	235	275	11

COOLING SLEEVE FOR 6" SUBMERSIBLE MOTOR PUMPS

FE pump type		FE motors		dimensions [mm]	model no. cooling sleeve 304SS**	Accessories	
		type*	P_N [kW]			model no. strainer	model no. support brackets (for horizontal installation)
6"	VS 14, VS 19, VS 30	4" CT PM	3- / 2,2 - 4,0	Ø 160 x 500	309 005 325	309 005 361 [Ø 160 mm x 158 mm]	309 005 611 (Set = 2 Stk.)
		4" CT	3- / 2,2	Ø 160 x 625	309 005 301		
		4" CT	3- / 3,7 - 5,5	Ø 160 x 800	309 005 302		
		4" CT	3- / 7,5	Ø 160 x 1000	309 005 303		
		6" CT	4,0	Ø 180 x 625	309 005 304	309 005 461 [Ø 180 mm x 192 mm]	309 005 612 (Set = 2 Stk.)
		6" CT	5,5 - 11	Ø 180 x 800	309 005 305		
		6" RW	4 - 9,3	Ø 180 x 800			
		6" CT	15 - 22	Ø 180 x 1000	309 005 307		
		6" RW	11 - 18,5	Ø 180 x 1000			
		6" CT	30	Ø 180 x 1250	309 005 309		
		6" RW	22 - 30	Ø 180 x 1250			
		6" CT	37	Ø 180 x 1700	309 005 313		309 005 613 (Set = 3 Stk.)
		6" RW	37	Ø 180 x 1700			
		6" CT	45	Ø 180 x 1700			
6"	VS 46 VS 65	4" CT	3,0 - 4	Ø 180 x 800	309 005 314	309 005 461 [Ø 180 mm x 192 mm]	309 005 612 (Set = 2 Stk.)
		4" CT	5,5 - 7,5	Ø 180 x 1000	309 005 315		
		6" CT	4 - 11	Ø 200 x 800	309 005 316	309 005 471 [Ø 200 mm x 192 mm]	309 005 622 (Set = 2 Stk.)
		6" RW	4 - 7,5	Ø 200 x 800			
		6" CT	15 - 22	Ø 200 x 1000	309 005 318		
		6" RW	9,3 - 18,5	Ø 200 x 1000			
		6" CT	30	Ø 200 x 1250	309 005 320		
		6" RW	22 - 26	Ø 200 x 1250			
		6" CT	37 - 45	Ø 200 x 1700	309 005 322		309 005 623 (Set = 3 Stk.)
		6" RW	30 - 37	Ø 200 x 1700			
		8" CT	55	Ø 254 x 1500	309 005 324	309 005 481 [Ø 256 mm x 325 mm]	309 005 624 (Set = 3 Stk.)
		8" RW	45 - 55				

* CT: encapsulated motors, RW: rewindable motors
** 316SS version: "N" added to model no.; 904L version: "R" added to model no. (available on request only for RW Motors up to 10")

DIMENSIONS SUPPORT BRACKETS 6"

support pump

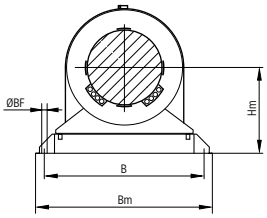

support flow sleeve / motor

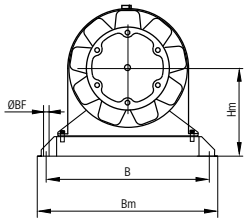

Support brackets model no.	Middle height	Support pump			Support flow sleeve / motor		
	Hm [mm]	B [mm]	Bm [mm]	Ø BF [mm]	B [mm]	Bm [mm]	Ø BF [mm]
309 005 611	125	280	330	11	280	330	11
309 005 612	140	260	310	11	300	350	11
309 005 613	140	260	310	11	300	350	11
309 005 622	150	320	370	11	320	370	11
309 005 623	150	320	370	11	320	370	11
309 005 624	200	280	330	15	380	430	15

COOLING SLEEVE FOR 8" SUBMERSIBLE MOTOR PUMPS

FE pump type		FE motors type*	FE motors P_N [kW]	dimensions [mm]	model no. cooling sleeve 304SS**	Accessories model no. strainer	Accessories model no. support brackets (for horizontal installation)
8"	VS 78	6" CT	7,5 - 18,5	Ø 225 x 1000	309 005 501	309 005 491 [Ø 225 mm x 240 mm]	309 005 631 (Set = 2 Stk.)
		6" RW	7,5 - 15	Ø 225 x 1000			
		6" CT	22 - 30	Ø 225 x 1250	309 005 503		
		6" RW	18,5 - 26	Ø 225 x 1250			
		6" CT	37	Ø 225 x 1700	309 005 505		309 005 632 (Set = 3 Stk.)
		6" RW	30 - 37	Ø 225 x 1700			
		8" CT	45	Ø 254 x 1250	309 005 507	309 005 481 [Ø 256 mm x 325 mm]	309 005 633 (Set = 2 Stk.)
		8" RW	30 - 37	Ø 254 x 1250			
		8" CT	55	Ø 254 x 1500	309 005 509		309 005 634 (Set = 3 Stk.)
		8" RW	45 - 55				
		8" CT	75	Ø 254 x 1700	309 005 510		
		8" RW	60 - 83				
		8" CT	93	Ø 254 x 2000	309 005 511		
		8" RW	93				
8"	VS 97	6" CT	7,5 - 18,5	Ø 254 x 1000	309 005 512	309 005 481 [Ø 256 mm x 325 mm]	309 005 633 (Set = 2 Stk.)
		6" RW	9,3 - 13	Ø 254 x 1000			
		6" CT	22 - 30	Ø 254 x 1250	309 005 514		
		6" RW	18,5 - 26	Ø 254 x 1250			
		6" CT	37	Ø 254 x 1700	309 005 516		309 005 634 (Set = 3 Stk.)
		6" RW	30 - 37	Ø 254 x 1700			
		8" CT	45	Ø 285 x 1250	309 005 518	309 005 526 [Ø 285 mm x 325 mm]	309 005 637 (Set = 2 Stk.)
		8" RW	30 - 37	Ø 285 x 1250			
		8" CT	55	Ø 285 x 1500	309 005 520		309 005 638 (Set = 3 Stk.)
		8" RW	45 - 55				
		8" CT	75	Ø 285 x 1700	309 005 521		
		8" RW	60 - 83				
		8" CT	93	Ø 285 x 2000	309 005 522		
		8" RW	93				

* CT: encapsulated motors, RW: rewindable motors
** 316SS version: "N" added to model no.; 904L version: "R" added to model no. (available on request only for RW Motors up to 10")

DIMENSIONS SUPPORT BRACKETS 8"

support pump

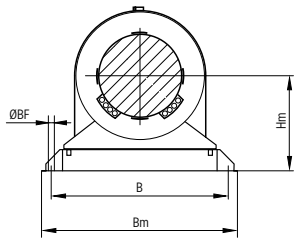

support flow sleeve / motor

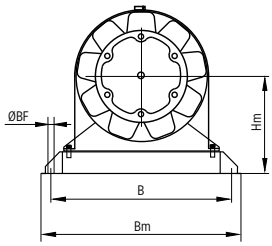

Support brackets model no.	Middle height Hm [mm]	Support pump B [mm]	Support pump Bm [mm]	Support pump Ø BF [mm]	Support flow sleeve / motor B [mm]	Support flow sleeve / motor Bm [mm]	Support flow sleeve / motor Ø BF [mm]
309 005 631	200	320	370	15	360	410	15
309 005 632	200	320	370	15	360	410	15
309 005 633	200	320	370	15	380	430	15
309 005 634	200	320	370	15	380	430	15
309 005 637	225	320	370	15	410	460	15
309 005 638	225	320	370	15	410	460	15
309 005 640	200	320	370	15	380	430	15
309 005 641	200	320	370	15	380	430	15
309 005 642	225	320	370	15	410	460	15
309 005 643	250	320	370	15	450	500	15

COOLING SLEEVE FOR VSI 8"/10"/12" SUBMERSIBLE MOTOR PUMPS

COOLING SLEEVE FOR VSI PUMPS 8"/10"/12" + 6 SSI PUMPS WITH SUBMERSIBLE MOTOR
For other combinations and special designs, please contact Franklin Electric or use the FEE pump selector:

https://fele-selector.com/StartMain.aspx

ACCESSORIES SUBMERSIBLE MOTORS

Surge Arrestor

These surge arrestors or their equivalents are highly recommended for protecting submersible motors from a variety of commonly occurring high voltage spikes which can damage the motor insulation system and cause motor winding failure. These arrestors will not, as is true of any surge protection equipment, protect the motor from a direct lightning strike.

Part-Nb.: 155 440 902

DC Disconnect

To disconnect the drive even under load safely from the solar generator, Franklin Electric offers suitable DC disconnect switches for all different power ratings.

0 - 13A/800V DC - 308 170 313
12 - 22A/800V DC - 308 170 325
25A/800V DC - 308 170 325

NOTES

OVERVIEW HIGH EFFICIENCY SYSTEMS

System solutions

SYSTEM SOLUTION 4"

- 4" encapsulated synchronous submersible motor
- submersible pump (optional)
- Variable frequency drive
- Matching output filter for 400 V systems
- Flow switch (Solar systems 4 - 7.5 kW)

- Motor range:
  1.1 / 2.2 / 3.0 / 4.0 / 7.5 kW (100 Hz - 3000 rpm)
  1.2 / 2.5 / 3.4 / 4.6 / 8.6 kW (120 Hz - 3600 rpm)
- System Power Supply: 220-400 / 460 V ± 10 % (50/60 Hz)

➡ 4" HES

SYSTEM SOLUTION 6"

- 6" encapsulated synchronous submersible motor
- submersible pump (optional)
- Variable frequency drive
- Matching output filter
- Flow switch (Solar systems)

- Motor range:
  4.0 – 11.0 / 13.0 – 22.0 / 26.0 - 45.0 kW (100 Hz - 3000 rpm)
  4.5 – 12.7 / 15.0 – 25.0 / 30.0 - 51.7 kW (120 Hz - 3600 rpm)
- System Power Supply: 380-400 V / 460 V ± 10 % (50/60 Hz)

➡ 6" HES

Motor performance curves 4"/6"/8"/10"

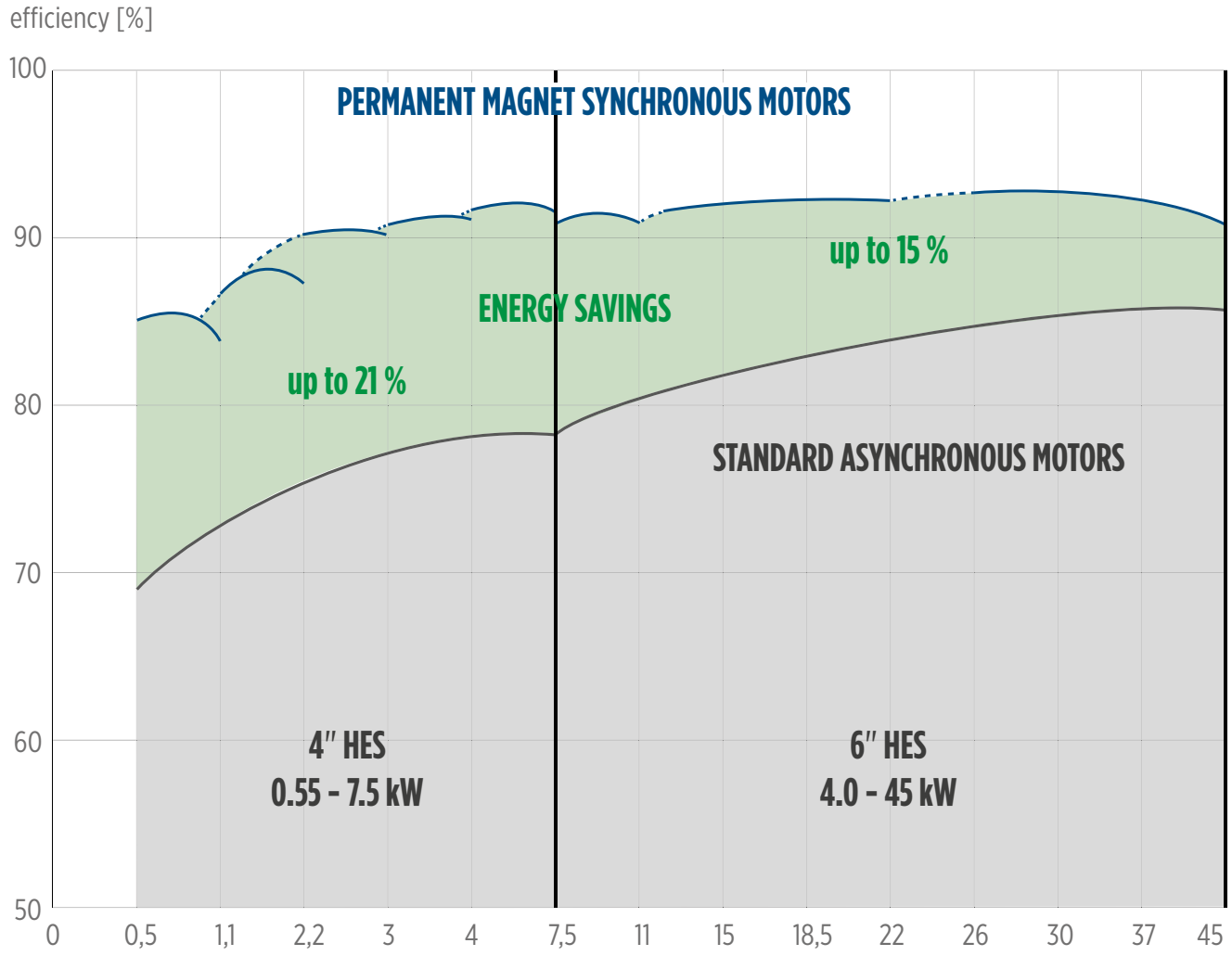

OVERVIEW HIGH EFFICIENCY SYSTEMS

System solutions

SYSTEM SOLUTION 8″

- 8″ rewindable synchronous submersible motor
- submersible pump (optional)
- Variable frequency drive
- Matching output filter
- Flow switch (Solar systems)

- Motor range: 75 / 100 / 130 kW (100 Hz - 3000 rpm)
  86.3 / 115 / 150 kW (120 Hz - 3600 rpm)
- System Power Supply: 400 / 460 V ± 10 % (50/60 Hz)

➡ 8″ HES

SYSTEM SOLUTION 10″

- 10″ rewindable synchronous submersible motor
- submersible pump (optional)
- Variable frequency drive
- Matching output filter
- Flow switch (Solar systems)

- Motor range: 190 - 250 kW (100 Hz - 3000 rpm)
  230 - 290 kW (120 Hz - 3600 rpm)
- System Power Supply: 400 / 460 V ± 10 % (50/60 Hz)

➡ 10″ HES

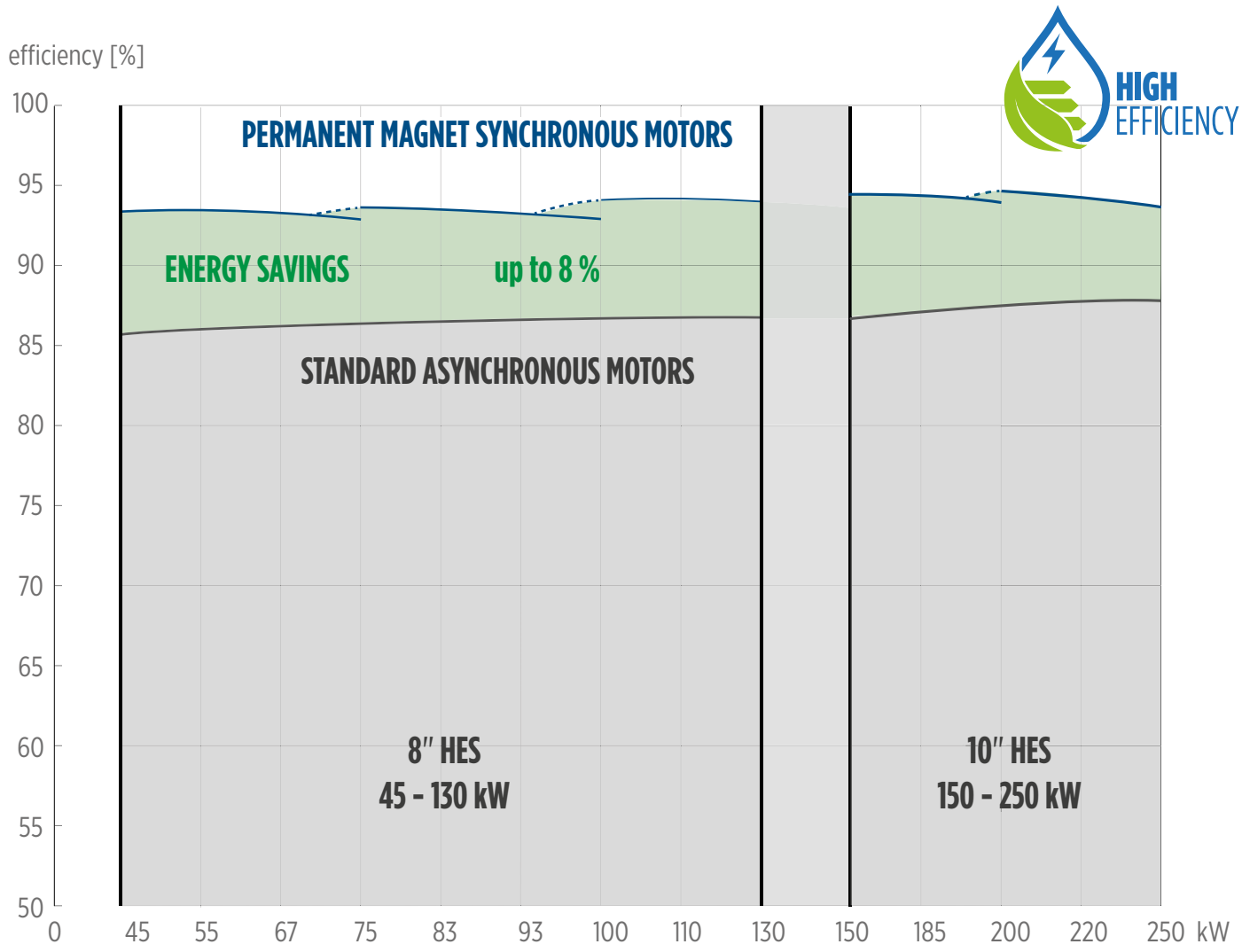

OVERVIEW HIGH EFFICIENCY SYSTEMS

Energy savings with the permanent magnet motor technology

The key factor for energy savings and superior efficiency is the permanent magnet technology of the motor. Instead of a short-circuit induction type rotor, the high efficiency motor contains a permanent magnet rotor design with buried magnets and magnetic core segments.

Of course, the PM motor also has all the advantages of standard Franklin motors, such as Franklin Electric's proven StatorSHIELD encapsulation system in the 4″ and 6″ motors with its encapsulated windings, or the hydrodynamic liquid-lubricated bearings and Kingsbury thrust bearings that provide maintenance-free operation.

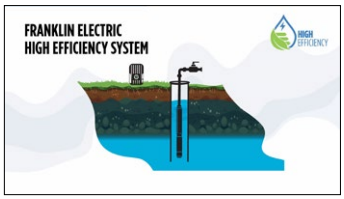

Click to view the video about cost savings of Franklin Electric High Efficiency Systems

SandFighter® sealing system

with SiC mechanical seal and sand slinger (6-12″)

StatorSHIELD™ - Franklin encapsulation system

Franklin Electric encapsulated motors are equipped with hermetically-sealed windings. The stator resin mechanically supports the winding and provides fast heat dissipation.

Hydrodynamic liquid lubricated radial bearings

100% maintenance free operation for all Franklin Electric encapsulated and rewindable motors

Permanent Magnet Technology

Motor rotors are equipped with permanent magnets that eliminate rotor losses thus significantly reducing motor current and heat rise.

Kingsbury type thrust bearing

for 100 % maintenance free operation

Pressure-equalizing diaphragm

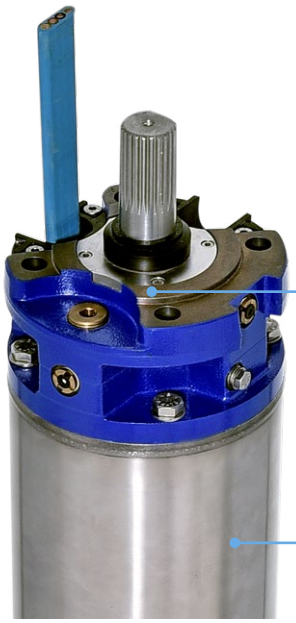

NEMA mounting design

Standard NEMA dimensions for all products 4″ - 8″

10″ motors with double flange mounting design according to industry standards

Best class winding wires in rewindable motors

The rewindable motors are equipped with best class winding wires. The windings can easily be replaced. The Franklin motors are factory filled with Franklin's FES non-toxic water soluble fill solution.

OVERVIEW HIGH EFFICIENCY SYSTEMS SOLUTION

Energy savings with the permanent magnet motor technology

The total rotor losses of a PM motor are eliminated, resulting in a significant improvement in efficiency. In addition, the PM motor has less temperature heat rise and requires lower Amps to run at the same pump load.

Overall electrical and mechanical losses of a submersible motor

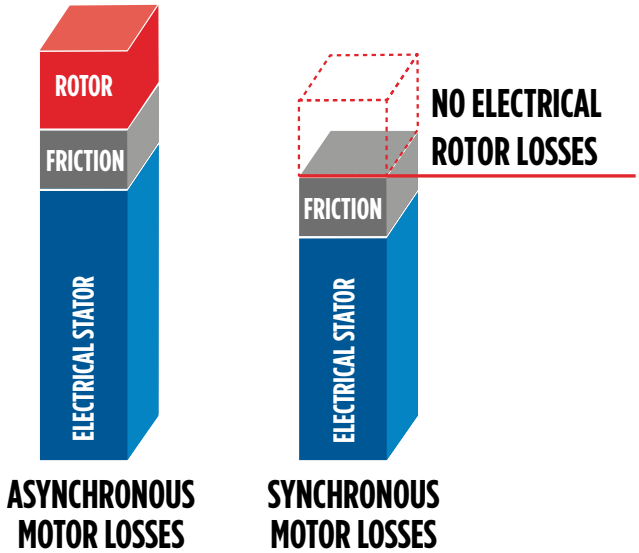

- No electrical rotor losses with permanent magnet motors
- Up to 21 % improved motor efficiency*
- Reduced motor current / cable cross-section

- Synchronous speed (no slip)
- Excellent partial load behaviour (Reduced stock levels)
- Less temperature heat rise

EASY INSTALLATION & SUPPORT

- Operation with grid or solar supply
- Easy and fast commissioning due to initial configuration wizard
- Remote control and real-time monitoring via Mobile App
- Remote assistance / Trouble shooting from the Franklin Electric support team

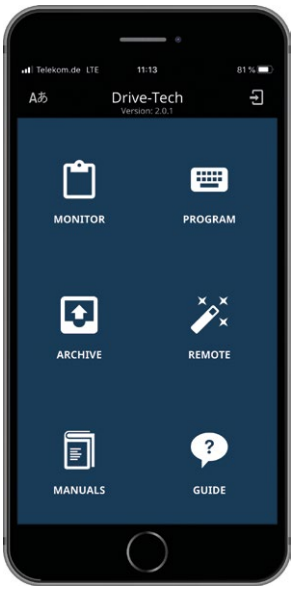

SELECTION TOOL

To find the right system, please use the Franklin Electric Pump Selector on *fele-selector.com.*

FRANKLIN ELECTRIC PUMP SELECTOR

*compared to current asynchronous technology and measured with Franklin Electric Original equipment

OVERVIEW HIGH EFFICIENCY SOLAR SYSTEMS

SYSTEM SOLUTION SOLAR

- Synchronous submersible motor
- Submersible pump (optional)
- Variable frequency drive
- Matching output filter (> 220 V)

- **Perfectly matched components guarantee first-class performance and efficiency**
- **Direct DC feeding, AC and DC power source compatible**
- **Suitable for the use in remote areas and harsh environments**
- **Robust Electronics enclosure designs**

Maximum system performance through MPPT algorithm

- **The special Franklin Electric MPPT algorithm for borehole applications maximizes the system performance.**

The solar system must be carefully sized to achieve the desired system performance. In addition to solar irradiance, this depends on the number of solar panels and how well the solar drive controls motor and pump.

4" Solar Voltage Boost (up to 2.2 kW)

- **Sizing in power rather than voltage**
- **Less panels, more water respectively**
- **Reduction of required Solar panels**
- **Saving of investments and installation work**

To generate the required voltage level to operate the system at full speed, enough solar panels need to be connected in series. With changing weather conditions, the voltage can drop, causing the system to immediately reduce pump speed to keep running. This reduces the amount of water pumped, but not just linearly. Due to pump affinity laws, the pump head or pressure is reduced squared, which then leads to a further reduction in water flow as it runs at a different pump operating point.

The Franklin Electric High Efficiency Solar system avoids dead head (zero flow) situation, when the pump is still operating, but it's not generating enough head to overcome a certain level. With the lower energy consumption of the High Efficiency System, there is an additional safety reserve to pump more water, or for a longer time period.

4"CT HIGH EFFICIENCY SYSTEM

Submersible Borehole System with energy savings up to 21 %*

FEATURES & BENEFITS

SUPERIOR EFFICIENCY

- Up to 21 % improved motor efficiency*
- Excellent partial load behaviour (SKU reduction)
- Due to the high motor efficiency, amps are significantly reduced, which might lead to smaller drop lead cross size and thus cost saving
- One-stop shop and perfectly matching components guarantee first-class performance/efficiency
- Power factor corrected input (No power compensation needed)

EASY INSTALLATION

- Easy system commissioning due to integrated start-up wizard with tailored pre settings

INCREASED LIFETIME

- Incorporated Soft start and protection features (increased lifetime, no additonal investment)
- Speed control (Optimum aggregate operation - pump matches system any time)

UP-TO-DATE CONNECTIVITY

- Factory-featured with Bluetooth 4.0 Connectivity
- Remote control and maintenance via Mobile App

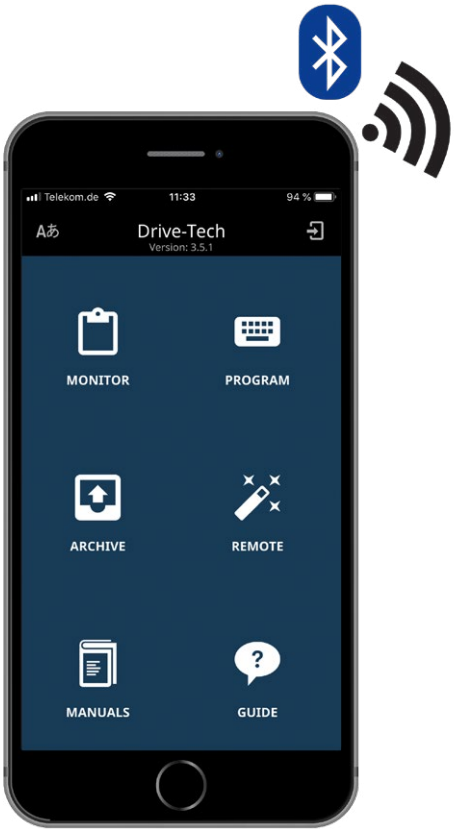

FULLY SUPPORTED

- Fully supported by the Technical Support Professionals and Field Service Engineers

APPLICATIONS

* in comparison to current asynchronous technology

4"CT HIGH EFFICIENCY SYSTEM

Submersible Borehole System with energy savings up to 21 %*

SPECIFICATION

- motor range:
  1.1 / 2.2 / 3.0 / 4.0 / 5.5 / 7.5 kW (100 Hz - 3000 rpm)
  1.2 / 2.5 / 3.4 / 4.6 / 8.6 kW (120 Hz - 3600 rpm)
- System Power Supply: 220 - 400 V ± 10 %
- System Supply Frequency: 50 Hz - 60 Hz ± 2 %
- Nominal ambient temperature: 30 °C, electronics: 50 °C (> 40 °C with derating)
- Motor installation orientation: vertical / horizontal (shaft end heightened)
- Protection motor: IP68, insulation class B
  drive: IP66
  filter: IP00
- 220/230 V kits without additional output filter

OPTIONS

- Special Voltages
- Higher-graded material: 316SS
- Matching output filters in IP00/23/54 (400V)
- VFD in IP20
- Solar

SYSTEM SOLUTION

- 4" encapsulated synchronous submersible NEMA motor
- submersible pump (optional)
- Variable frequency drive
- Matching output filter for 400 V systems

* in comparison to current asynchronous technology

4"CT HIGH EFFICIENCY SYSTEM

HES4 | DRIVE-TECH MINI

High Efficiency PM motor					DrivE-Tech MINI				output filter			
V_N [V]	part no. [304SS]*	description	I_N [A]	P_N [kW]	part no.	description	I_N [A]	IP	part no.	description	I_N [A]	IP
220	2340716721L	4PM-LT-1.1-220-100	3.8	1.1	002149112	DRIVE-TECH MINI 2.011 M/T	5	66	-	-	-	-
220	2340726721L	4PM-LT-2.2-220-100	7	2.2	002149152	DRIVE-TECH MINI 2.015 M/T	7.5	66	-	-	-	-
380	2340626721L	4PM-LT-2.2-380-100	4	2.2	314000162	DRIVE-TECH MINI 4.011 T/T	4	66	002352414	DV/DT FILTER	14	00
380	2340636721L	4PM-LT-3.0-380-100	5.4	3	314000163	DRIVE-TECH MINI 4.022 T/T	6	66	002352414	DV/DT FILTER	14	00
380	2340643421L	4PM-HT-4.0-380-100	7.3	4	314000164	DRIVE-TECH MINI 4.040 T/T	10.5	66	002352414	DV/DT FILTER	14	00
380	2340626721L	4PM-LT-2.2-380-100	4	2.2	314000162	DRIVE-TECH MINI 4.011 T/T	4	66	002347013	SINE WAVE FILTER	14	00
380	2340636721L	4PM-LT-3.0-380-100	5.4	3	314000163	DRIVE-TECH MINI 4.022 T/T	6	66	002347013	SINE WAVE FILTER	14	00
380	2340643421L	4PM-HT-4.0-380-100	7.3	4	314000164	DRIVE-TECH MINI 4.040 T/T	10.5	66	002347013	SINE WAVE FILTER	14	00

HES4 | DRIVE-TECH COMPACT

High Efficiency PM motor					DrivE-Tech COMPACT				output filter			
V_N [V]	part no. [304SS]*	description	I_N [A]	P_N [kW]	part no.	description	I_N [A]	IP	part no.	description	I_N [A]	IP
220	2340736721L	4PM-LT-3.0-220-100	9.4	3	002152120	DRIVETECH COMP 2.030 M/T	12.5	66	-	-	-	-
220	2340743421L	4PM-HT-4.0-220-100	13	4	002152180	DRIVETECH COMP 2.040 M/T	18.5	66	-	-	-	-
380	2340663421L	4PM-HT-7.5-380-100	13.1	7.5	002150140	DRIVE-TECH COMP 4.055 T/T	14	66	002150FC0	DTC DV/DT FILTER CARD	32	66
380	2340663421L	4PM-HT-7.5-380-100	13.1	7.5	002150140	DRIVE-TECH COMP 4.055 T/T	14	66	002347013	SINE WAVE FILTER	14	00

HES4 | DRIVE-TECH

High Efficiency PM motor					DrivE-Tech				output filter			
V_N [V]	part no. [304SS]*	description	I_N [A]	P_N [kW]	part no.	description	I_N [A]	IP	part no.	description	I_N [A]	IP
220	2340716721L	4PM-LT-1.1-220-100	3.8	1.1	002149115	DRIVE-TECH 2.015 M/T	7	65	-	-	-	-
220	2340726721L	4PM-LT-2.2-220-100	7	2.2	002149115	DRIVE-TECH 2.015 M/T	7	65	-	-	-	-
220	2340736721L	4PM-LT-3.0-220-100	9.4	3	002149131	DRIVE-TECH 2.030 M/T	11	65	-	-	-	-

HES4 | DRIVE-TECH MINI SOLAR

High Efficiency PM motor					DrivE-Tech MINI Solar				output filter			
V_N [V]	part no. [304SS]*	description	I_N [A]	P_N [kW]	part no.	description	I_N [A]	IP	part no.	description	I_N [A]	IP
220	2340716721L	4PM-LT-1.1-220-100	3.8	1.1	314000166	DRIVE-TECH MINI SOLAR 2.011 MP	5	66	-	-	-	-
220	2340726721L	4PM-LT-2.2-220-100	7	2.2	314000167	DRIVE-TECH MINI SOLAR 2.015 MP	7.5	66	-	-	-	-

HES4 | DRIVE-TECH COMPACT SOLAR

High Efficiency PM motor					DrivE-Tech COMPACT Solar				output filter			
V_N [V]	part no. [304SS]*	description	I_N [A]	P_N [kW]	part no.	description	I_N [A]	IP	part no.	description	I_N [A]	IP
380	2340643421L	4PM-HT-4.0-220-100	7.3	4	002150141	DRIVE-TECH COMP SOLAR 4.055 MP	14	66	002150FC0	DTC DV/DT FILTER CARD	32	66
380	2340663421L	4PM-HT-7.5-380-100	13.1	7.5	002150141	DRIVE-TECH COMP SOLAR 4.055 MP	14	66	002150FC0	DTC DV/DT FILTER CARD	32	66

* 316SS Motor version: 234 xxx 6821L / 3521L

6" CT HIGH EFFICIENCY SYSTEM

Submersible Borehole System with energy savings up to 15 %*

FEATURES & BENEFITS

SUPERIOR EFFICIENCY

- Up to 15 % improved motor efficiency with excellent partial load behaviour (SKU reduction)*
- Due to the high motor efficiency, amps are significantly reduced, which might lead to smaller drop lead cross size and thus cost saving
- One-stop shop and perfectly matching components guarantee first-class performance/efficiency
- Power factor corrected input (No power compensation needed)
- Reduced motor length and weight

EASY INSTALLATION

- Easy system set-up due to selectable application presets, integrated start-up assistant and mobile app support

INCREASED LIFETIME

- Incorporated Soft start and protection features (increased lifetime, no additonal investment)
- Speed control (Optimum aggregate operation - pump matches system any time)

CONNECTIVITY

- Bluetooth Communication, ModBus (RS485 and Ethernet), BACnet and optional communication cards

FULLY SUPPORTED

- Fully supported by the Technical Support Professionals and Field Service Engineers

SYSTEM SOLUTION

- 6" encapsulated synchronous submersible NEMA motor
- Variable frequency drive
- Matching output filter
- Submersible pump (optional)

*in comparison to current asynchronous technology

6" CT HIGH EFFICIENCY SYSTEM

Submersible Borehole System with energy savings up to 15 %*

STANDARD SPECIFICATION

- motor range: 4.0 – 11.0 / 13.0 – 22.0 / 26.0 - 45.0 kW (100 Hz - 3000 rpm)
  4.6 – 12.7 / 15.0 – 25.0 / 30.0 - 51.7 kW (120 Hz - 3600 rpm)
- System Power Supply: 380-400 V / 460 V ± 10 % (50/60 Hz)
- System Supply Frequency: 50/60 Hz ± 6 %
- Motor installation orientation: vertical / horizontal (shaft end heightened)
- Protection motor: IP68, insulation class F
  drive: IP00 / IP20 / IP66 (IP54 on request)
  filter: IP00/54 (plug-in filter card for DrivE-Tech COMPACT)

OPTIONS

Pressure transducers (see accessories)
Wall mounting kit - 002150WK0 (DrivE-Tech COMPACT)
Plug-in filter card - 002150FC0 (DrivE-Tech COMPACT)
Retrofitable PT 100 temperature sensor

APPLICATIONS

6" CT HIGH EFFICIENCY SYSTEM

HES6 | DRIVE-TECH COMPACT

High Efficiency PM motor					DrivE-Tech COMPACT				output filter			
V_N [V]	part no. [304SS]*	description	I_N [A]	P_N [kW]	part no.	description	I_N [A]	IP	part no.	description	I_N [A]	IP
380	2360801461	6R2-PM-11-380-100-304SS	14.1	7.5	002150140	DRIVE-TECH COMP 4.055	14	66	002150FC0	DTC DV/DT FILTER CARD	32	66
380	2360801461	6R2-PM-11-380-100-304SS	20.5	11	002150250	DRIVE-TECH COMP 4.110	25	66	002150FC0	DTC DV/DT FILTER CARD	32	66
380	2360841461	6R2-PM-22-380-100-304SS	25.3	13	002150300	DRIVE-TECH COMP 4.150	30	66	002150FC0	DTC DV/DT FILTER CARD	32	66
380	2360841461	6R2-PM-22-380-100-304SS	28.3	15	002150300	DRIVE-TECH COMP 4.150	30	66	002150FC0	DTC DV/DT FILTER CARD	32	66
380	2360841461	6R2-PM-22-380-100-304SS	34.1	18.5	002150380	DRIVE-TECH COMP 4.185	38	66	002150FC0	DTC DV/DT FILTER CARD	32	66
380	2360841461	6R2-PM-22-380-100-304SS	40.7	22	002150440	DRIVE-TECH COMP 4.220	44	66	002352490	DV/DT FILTER	90	00
380	2360801461	6R2-PM-11-380-100-304SS	14.1	7.5	002150140	DRIVE-TECH COMP 4.055	14	66	002347013	SINE WAVE FILTER	14	00
380	2360801461	6R2-PM-11-380-100-304SS	20.5	11	002150250	DRIVE-TECH COMP 4.110	25	66	002347011	SINE WAVE FILTER	32	00
380	2360841461	6R2-PM-22-380-100-304SS	25.3	13	002150300	DRIVE-TECH COMP 4.150	30	66	002347011	SINE WAVE FILTER	32	00
380	2360841461	6R2-PM-22-380-100-304SS	28.3	15	002150300	DRIVE-TECH COMP 4.150	30	66	002347011	SINE WAVE FILTER	32	00
380	2360841461	6R2-PM-22-380-100-304SS	34.1	18.5	002150380	DRIVE-TECH COMP 4.185	38	66	002347012	SINE WAVE FILTER	115	00
380	2360841461	6R2-PM-22-380-100-304SS	40.7	22	002150440	DRIVE-TECH COMP 4.220	44	66	002347012	SINE WAVE FILTER	115	00
380	2360841461	6R2-PM-22-380-100-304SS	34.1	18.5	002150380	DRIVE-TECH COMP 4.185	38	66	314005115	SINE WAVE FILTER	38	54
380	2360841461	6R2-PM-22-380-100-304SS	40.7	22	002150440	DRIVE-TECH COMP 4.220	44	66	314005139	SINE WAVE FILTER	46	54

HES6 | DRIVE-TECH

High Efficiency PM motor					DrivE-Tech				output filter			
V_N [V]	part no. [304SS]*	description	I_N [A]	P_N [kW]	part no.	description	I_N [A]	IP	part no.	description	I_N [A]	IP
380	2360861461	6R2-PM-45-380-100-304SS	51.2	26	002149300	DRIVE-TECH 4.300	65	54	002352490	DV/DT FILTER	90	00
380	2360861461	6R2-PM-45-380-100-304SS	57.8	30	002149300	DRIVE-TECH 4.300	65	54	002352490	DV/DT FILTER	90	00
380	2360861461	6R2-PM-45-380-100-304SS	71.3	37	002149370	DRIVE-TECH 4.370	75	54	002352490	DV/DT FILTER	90	00
380	2360861461	6R2-PM-45-380-100-304SS	90	45	002149550	DRIVE-TECH 4.550	118	54	002352490	DV/DT FILTER	90	00
380	2360861461	6R2-PM-45-380-100-304SS	51.2	26	002149300	DRIVE-TECH 4.300	65	54	314005112	DV/DT FILTER	62	54
380	2360861461	6R2-PM-45-380-100-304SS	57.8	30	002149300	DRIVE-TECH 4.300	65	54	314005112	DV/DT FILTER	62	54
380	2360861461	6R2-PM-45-380-100-304SS	71.3	37	002149370	DRIVE-TECH 4.370	75	54	314005118	DV/DT FILTER	88	54
380	2360861461	6R2-PM-45-380-100-304SS	90	45	002149550	DRIVE-TECH 4.550	118	54	314005124	DV/DT FILTER	140	54
380	2360861461	6R2-PM-45-380-100-304SS	51.2	26	002149300	DRIVE-TECH 4.300	65	54	002347012	SINE WAVE FILTER	115	00
380	2360861461	6R2-PM-45-380-100-304SS	57.8	30	002149300	DRIVE-TECH 4.300	65	54	002347012	SINE WAVE FILTER	115	00
380	2360861461	6R2-PM-45-380-100-304SS	71.3	37	002149370	DRIVE-TECH 4.370	75	54	002347012	SINE WAVE FILTER	115	00
380	2360861461	6R2-PM-45-380-100-304SS	90	45	002149550	DRIVE-TECH 4.550	118	54	002347012	SINE WAVE FILTER	115	00
380	2360861461	6R2-PM-45-380-100-304SS	51.2	26	002149300	DRIVE-TECH 4.300	65	54	314005116	SINE WAVE FILTER	72	54
380	2360861461	6R2-PM-45-380-100-304SS	57.8	30	002149300	DRIVE-TECH 4.300	65	54	314005116	SINE WAVE FILTER	72	54
380	2360861461	6R2-PM-45-380-100-304SS	71.3	37	002149370	DRIVE-TECH 4.370	75	54	314005116	SINE WAVE FILTER	72	54
380	2360861461	6R2-PM-45-380-100-304SS	90	45	002149550	DRIVE-TECH 4.550	118	54	214005127	SINE WAVE FILTER	140	54

* WW- Water well Design (Stator 304SS / Castings - CI Powder coated) 236 xxx 9561
* 316SS Motor version: 236 xxx 1561

6" CT HIGH EFFICIENCY SYSTEM

HES6 | X-DRIVE

High Efficiency PM motor					CERUS X-Drive				output filter			
V_N [V]	part no. [304SS]*	description	I_N [A]	P_N [kW]	part no.	description	I_N [A]	IP	part no.	description	I_N [A]	IP
380	2360801461	6R2-PM-11-380-100-304SS	14.1	7.5	CXD-018A-4V-K	X-DRIVE 018A KIT	18	20	002352414	DV/DT FILTER	14	00
380	2360801461	6R2-PM-11-380-100-304SS	20.5	11	CXD-024A-4V-K	X-DRIVE 024A KIT	24	20	002352432	DV/DT FILTER	32	00
380	2360841461	6R2-PM-22-380-100-304SS	25.3	13	CXD-032A-4V-K	X-DRIVE 032A KIT	32	20	002352432	DV/DT FILTER	32	00
380	2360841461	6R2-PM-22-380-100-304SS	28.3	15	CXD-032A-4V-K	X-DRIVE 032A KIT	32	20	002352432	DV/DT FILTER	32	00
380	2360841461	6R2-PM-22-380-100-304SS	34.1	18.5	CXD-038A-4V-K	X-DRIVE 038A KIT	38	20	002352490	DV/DT FILTER	90	00
380	2360841461	6R2-PM-22-380-100-304SS	40.7	22	CXD-045A-4V-K	X-DRIVE 045A KIT	45	20	002352490	DV/DT FILTER	90	00
380	2360861461	6R2-PM-45-380-100-304SS	51.2	26	CXD-060A-4V-K	X-DRIVE 060A KIT	60	20	002352490	DV/DT FILTER	90	00
380	2360861461	6R2-PM-45-380-100-304SS	57.8	30	CXD-060A-4V-K	X-DRIVE 060A KIT	60	20	002352490	DV/DT FILTER	90	00
380	2360861461	6R2-PM-45-380-100-304SS	71.3	37	CXD-073A-4V-K	X-DRIVE 073A KIT	73	20	002352490	DV/DT FILTER	90	00
380	2360861461	6R2-PM-45-380-100-304SS	90	45	CXD-091A-4V-K	X-DRIVE 091A KIT	91	20	002352490	DV/DT FILTER	90	00
380	2360861461	6R2-PM-45-380-100-304SS	51.2	26	CXD-060A-4V-K	X-DRIVE 060A KIT	60	20	314005112	DV/DT FILTER	62	54
380	2360861461	6R2-PM-45-380-100-304SS	57.8	30	CXD-060A-4V-K	X-DRIVE 060A KIT	60	20	314005112	DV/DT FILTER	62	54
380	2360861461	6R2-PM-45-380-100-304SS	71.3	37	CXD-073A-4V-K	X-DRIVE 073A KIT	73	20	314005118	DV/DT FILTER	88	54
380	2360861461	6R2-PM-45-380-100-304SS	90	45	CXD-091A-4V-K	X-DRIVE 091A KIT	91	20	314005124	DV/DT FILTER	140	54
380	2360801461	6R2-PM-11-380-100-304SS	14.1	7.5	CXD-018A-4V-K	X-DRIVE 018A KIT	18	20	002347013	SINE WAVE FILTER	14	00
380	2360801461	6R2-PM-11-380-100-304SS	20.5	11	CXD-024A-4V-K	X-DRIVE 024A KIT	24	20	002347011	SINE WAVE FILTER	32	00
380	2360841461	6R2-PM-22-380-100-304SS	25.3	13	CXD-032A-4V-K	X-DRIVE 032A KIT	32	20	002347011	SINE WAVE FILTER	32	00
380	2360841461	6R2-PM-22-380-100-304SS	28.3	15	CXD-032A-4V-K	X-DRIVE 032A KIT	32	20	002347011	SINE WAVE FILTER	32	00
380	2360841461	6R2-PM-22-380-100-304SS	34.1	18.5	CXD-038A-4V-K	X-DRIVE 038A KIT	38	20	002347012	SINE WAVE FILTER	115	00
380	2360841461	6R2-PM-22-380-100-304SS	40.7	22	CXD-045A-4V-K	X-DRIVE 045A KIT	45	20	002347012	SINE WAVE FILTER	115	00
380	2360841461	6R2-PM-22-380-100-304SS	34.1	18.5	CXD-038A-4V-K	X-DRIVE 038A KIT	38	20	314005115	SINE WAVE FILTER	38	54
380	2360841461	6R2-PM-22-380-100-304SS	40.7	22	CXD-045A-4V-K	X-DRIVE 045A KIT	45	20	314005139	SINE WAVE FILTER	46	54
380	2360861461	6R2-PM-45-380-100-304SS	51.2	26	CXD-060A-4V-K	X-DRIVE 060A KIT	60	20	002347012	SINE WAVE FILTER	115	00
380	2360861461	6R2-PM-45-380-100-304SS	57.8	30	CXD-060A-4V-K	X-DRIVE 060A KIT	60	20	002347012	SINE WAVE FILTER	115	00
380	2360861461	6R2-PM-45-380-100-304SS	71.3	37	CXD-073A-4V-K	X-DRIVE 073A KIT	73	20	002347012	SINE WAVE FILTER	115	00
380	2360861461	6R2-PM-45-380-100-304SS	90	45	CXD-091A-4V-K	X-DRIVE 091A KIT	91	20	002347012	SINE WAVE FILTER	115	00
380	2360861461	6R2-PM-45-380-100-304SS	51.2	26	CXD-060A-4V-K	X-DRIVE 060A KIT	60	20	314005116	SINE WAVE FILTER	72	54
380	2360861461	6R2-PM-45-380-100-304SS	57.8	30	CXD-060A-4V-K	X-DRIVE 060A KIT	60	20	314005116	SINE WAVE FILTER	72	54
380	2360861461	6R2-PM-45-380-100-304SS	71.3	37	CXD-073A-4V-K	X-DRIVE 073A KIT	73	20	314005116	SINE WAVE FILTER	72	54
380	2360861461	6R2-PM-45-380-100-304SS	90	45	CXD-091A-4V-K	X-DRIVE 091A KIT	91	20	214005127	SINE WAVE FILTER	140	54

* WW- Water well Design (Stator 304SS / Castings - CI Powder coated) 236 xxx 9561
* 316SS Motor version: 236 xxx 1561

6" CT HIGH EFFICIENCY SYSTEM

HES6 | DRIVE-TECH COMPACT SOLAR

High Efficiency PM motor					DrivE-Tech COMPACT Solar				output filter			
V_N [V]	part no. [304SS]*	description	I_N [A]	P_N [kW]	part no.	description	I_N [A]	IP	part no.	description	I_N [A]	IP
380	2360801461	6R2-PM-11-380-100-304SS	14.1	7.5	002150141	DRIVE-TECH COMP 4.055	14	66	002150FC0	DTC DV/DT FILTER CARD	32	66
380	2360801461	6R2-PM-11-380-100-304SS	20.5	11	002150251	DRIVE-TECH COMP 4.110	25	66	002150FC0	DTC DV/DT FILTER CARD	32	66
380	2360841461	6R2-PM-22-380-100-304SS	25.3	13	002150301	DRIVE-TECH COMP 4.150	30	66	002150FC0	DTC DV/DT FILTER CARD	32	66
380	2360841461	6R2-PM-22-380-100-304SS	28.3	15	002150301	DRIVE-TECH COMP 4.150	30	66	002150FC0	DTC DV/DT FILTER CARD	32	66
380	2360841461	6R2-PM-22-380-100-304SS	34.1	18.5	002150381	DRIVE-TECH COMP 4.185	38	66	002150FC0	DTC DV/DT FILTER CARD	32	66
380	2360841461	6R2-PM-22-380-100-304SS	40.7	22	002150441	DRIVE-TECH COMP 4.220	44	66	002352490	DV/DT FILTER	90	00

HES6 | DRIVE-TECH SOLAR

High Efficiency PM motor					DrivE-Tech Solar				output filter			
V_N [V]	part no. [304SS]*	description	I_N [A]	P_N [kW]	part no.	description	I_N [A]	IP	part no.	description	I_N [A]	IP
380	2360861461	6R2-PM-45-380-100-304SS	51.2	26	002149A09	DRIVE-TECH 4.300 SOLAR MP	65	54	002352490	DV/DT FILTER	90	00
380	2360861461	6R2-PM-45-380-100-304SS	57.8	30	002149A09	DRIVE-TECH 4.300 SOLAR MP	65	54	002352490	DV/DT FILTER	90	00
380	2360861461	6R2-PM-45-380-100-304SS	71.3	37	002149A10	DRIVE-TECH 4.370 SOLAR MP	75	54	002352490	DV/DT FILTER	90	00
380	2360861461	6R2-PM-45-380-100-304SS	90	45	002149A12	DRIVE-TECH 4.550 SOLAR MP	118	54	002352490	DV/DT FILTER	90	00
380	2360861461	6R2-PM-45-380-100-304SS	51.2	26	002149A09	DRIVE-TECH 4.300 SOLAR MP	65	54	314005112	DV/DT FILTER	62	54
380	2360861461	6R2-PM-45-380-100-304SS	57.8	30	002149A09	DRIVE-TECH 4.300 SOLAR MP	65	54	314005112	DV/DT FILTER	62	54
380	2360861461	6R2-PM-45-380-100-304SS	71.3	37	002149A10	DRIVE-TECH 4.370 SOLAR MP	75	54	314005118	DV/DT FILTER	88	54
380	2360861461	6R2-PM-45-380-100-304SS	90	45	002149A12	DRIVE-TECH 4.550 SOLAR MP	118	54	314005124	DV/DT FILTER	140	54

* WW- Water well Design (Stator 304SS / Castings - CI Powder coated) 236 xxx 9561
* 316SS Motor version: 236 xxx 1561

8" REW HIGH EFFICIENCY SYSTEM

Submersible Borehole System with energy savings up to 8%*

FEATURES & BENEFITS

SUPERIOR EFFICIENCY

- Up to 8 % improved motor efficiency* with excellent partial load behaviour (SKU reduction)*
- One-stop shop and perfectly matching components guarantee first-class performance/efficiency
- Power factor corrected input (No power compensation needed)
- Reduced motor length and weight

INCREASED LIFETIME

- Incorporated Soft start and protection features (increased lifetime, no additonal investment)
- Speed control (Optimum aggregate operation - pump matches system any time)

FULLY SUPPORTED

- Easy system set-up due to selectable application presets, integrated start-up assistant and mobile app support
- Fully supported by the Technical Support Professionals and Field Service Engineers

CONNECTIVITY

- Communication ModBus (RS485 and Ethernet, optional Profibus)

SYSTEM SOLUTION

- 8" rewindable synchronous submersible NEMA motor
- Variable frequency drive
- Matching output filter
- Submersible pump (optional)

APPLICATIONS

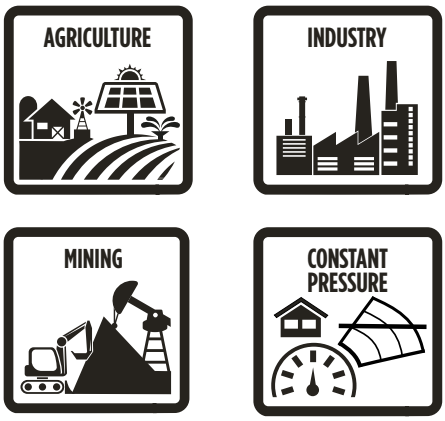

* in comparison to current asynchronous technology

8" REW HIGH EFFICIENCY SYSTEM

STANDARD SPECIFICATION

- motor range: 75 / 100 / 130 kW (100 Hz - 3000 rpm), 86.3 / 115 / 150 kW (120 Hz - 3600 rpm)
- System Power Supply: 400 / 460 V ± 10 % (50/60 Hz)
- System Supply Frequency: 50 - 60 Hz ± 6%
- Nominal ambient temperature: 30 °C, electronics: 50 °C (> 40 °C with derating)
- Motor installation orientation: vertical / horizontal (shaft end heightened)
- Protection: motor: IP68, insulation class Y
  drive: IP20/00
  filter: IP00/54

OPTIONS

- Special Voltages
- Higher-graded material: 316SS, 904L
- Retrofitable PT 100 temperature sensor
- dV/dt and Sinus output filters in IP54 and IP00

HES8 | X-DRIVE

High Efficiency PM motor					CERUS X-Drive				output filter			
V_N [V]	part no. [WW]*	description	I_N [A]	P_N [kW]	part no.	description	I_N [A]	IP	part no.	description	I_N [A]	IP
380	2630145311	8PM-75-400-100	91	55	CXD-091A-4V-K	X-DRIVE 091A KIT	91	20	002352490	DV/DT FILTER	90	00
380	2630145311	8PM-75-400-100	112	67	CXD-150A-4V-K	X-DRIVE 150A KIT	150	20	314005137	DV/DT FILTER	105	00
380	2630145311	8PM-75-400-100	128	75	CXD-150A-4V-K	X-DRIVE 150A KIT	150	20	314005130	DV/DT FILTER	140	00
380	2630145311	8PM-75-400-100	91	55	CXD-091A-4V-K	X-DRIVE 091A KIT	91	20	314005124	DV/DT FILTER	140	54
380	2630145311	8PM-75-400-100	112	67	CXD-150A-4V-K	X-DRIVE 150A KIT	150	20	314005124	DV/DT FILTER	140	54
380	2630145311	8PM-75-400-100	128	75	CXD-150A-4V-K	X-DRIVE 150A KIT	150	20	314005124	DV/DT FILTER	140	54
380	2630165311	8PM-100-400-100	143	83	CXD-150A-4V-K	X-DRIVE 150A KIT	150	20	314005130	DV/DT FILTER	140	00
380	2630165311	8PM-100-400-100	162	93	CXD-180A-4V-K	X-DRIVE 180A KIT	180	20	314005119	DV/DT FILTER	205	00
380	2630165311	8PM-100-400-100	178	100	CXD-180A-4V-K	X-DRIVE 180A KIT	180	20	314005119	DV/DT FILTER	205	00
380	2630165311	8PM-100-400-100	143	83	CXD-150A-4V-K	X-DRIVE 150A KIT	150	20	314005124	DV/DT FILTER	140	54
380	2630165311	8PM-100-400-100	162	93	CXD-180A-4V-K	X-DRIVE 180A KIT	180	20	314005125	DV/DT FILTER	205	54
380	2630165311	8PM-100-400-100	178	100	CXD-180A-4V-K	X-DRIVE 180A KIT	180	20	314005125	DV/DT FILTER	205	54
380	2630185311	8PM-130-400-100	153	93	CXD-180A-4V-K	X-DRIVE 180A KIT	180	20	314005119	DV/DT FILTER	205	00
380	2630185311	8PM-130-400-100	186	110	CXD-220A-4V-K	X-DRIVE 220A KIT	220	20	314005119	DV/DT FILTER	205	00
380	2630185311	8PM-130-400-100	225	130	CXD-260A-4V-K	X-DRIVE 260A KIT	260	20	002352533	DV/DT FILTER	330	00
380	2630185311	8PM-130-400-100	153	93	CXD-180A-4V-K	X-DRIVE 180A KIT	180	20	314005125	DV/DT FILTER	205	54
380	2630185311	8PM-130-400-100	186	100	CXD-220A-4V-K	X-DRIVE 220A KIT	220	20	314005125	DV/DT FILTER	205	54
380	2630185311	8PM-130-400-100	225	130	CXD-260A-4V-K	X-DRIVE 260A KIT	260	20	314005126	DV/DT FILTER	310	54
380	2630145311	8PM-75-400-100	91	55	CXD-091A-4V-K	X-DRIVE 091A KIT	91	20	002347012	SINE WAVE FILTER	115	00
380	2630145311	8PM-75-400-100	112	67	CXD-150A-4V-K	X-DRIVE 150A KIT	150	20	002347012	SINE WAVE FILTER	115	00
380	2630145311	8PM-75-400-100	128	75	CXD-150A-4V-K	X-DRIVE 150A KIT	150	20	314005121	SINE WAVE FILTER	140	00
380	2630145311	8PM-75-400-100	91	55	CXD-091A-4V-K	X-DRIVE 091A KIT	91	20	002347020	SINE WAVE FILTER	180	54
380	2630145311	8PM-75-400-100	112	67	CXD-150A-4V-K	X-DRIVE 150A KIT	150	20	002347020	SINE WAVE FILTER	180	54
380	2630145311	8PM-75-400-100	128	75	CXD-150A-4V-K	X-DRIVE 150A KIT	150	20	002347020	SINE WAVE FILTER	180	54
380	2630165311	8PM-100-400-100	143	83	CXD-150A-4V-K	X-DRIVE 150A KIT	150	20	314005121	SINE WAVE FILTER	140	00
380	2630165311	8PM-100-400-100	162	93	CXD-180A-4V-K	X-DRIVE 180A KIT	180	20	314005122	SINE WAVE FILTER	205	00
380	2630165311	8PM-100-400-100	178	100	CXD-180A-4V-K	X-DRIVE 180A KIT	180	20	314005122	SINE WAVE FILTER	205	00
380	2630165311	8PM-100-400-100	143	83	CXD-150A-4V-K	X-DRIVE 150A KIT	150	20	002347020	SINE WAVE FILTER	180	54
380	2630165311	8PM-100-400-100	162	93	CXD-180A-4V-K	X-DRIVE 180A KIT	180	20	314005128	SINE WAVE FILTER	205	54
380	2630165311	8PM-100-400-100	178	100	CXD-180A-4V-K	X-DRIVE 180A KIT	180	20	314005128	SINE WAVE FILTER	205	54
380	2630185311	8PM-130-400-100	153	93	CXD-180A-4V-K	X-DRIVE 180A KIT	180	20	314005122	SINE WAVE FILTER	205	00
380	2630185311	8PM-130-400-100	186	110	CXD-220A-4V-K	X-DRIVE 220A KIT	220	20	314005122	SINE WAVE FILTER	205	00
380	2630185311	8PM-130-400-100	225	130	CXD-260A-4V-K	X-DRIVE 260A KIT	260	20	314005123	SINE WAVE FILTER	310	00
380	2630185311	8PM-130-400-100	153	93	CXD-180A-4V-K	X-DRIVE 180A KIT	180	20	314005128	SINE WAVE FILTER	205	54
380	2630185311	8PM-130-400-100	186	110	CXD-220A-4V-K	X-DRIVE 220A KIT	220	20	314005128	SINE WAVE FILTER	205	54
380	2630185311	8PM-130-400-100	225	130	CXD-260A-4V-K	X-DRIVE 260A KIT	260	20	314005129	SINE WAVE FILTER	310	54

* WW- Water well Design (Stator 304SS / Castings - CI Powder coated)
* 316SS Motor version: 263 xxx 6311
* 904L Motor version: 263 xxx 7311

8" REW HIGH EFFICIENCY SYSTEM

HES8 | DRIVE-TECH

High Efficiency PM motor					DrivE-Tech				output filter			
V_N [V]	part no. [WW]*	description	I_N [A]	P_N [kW]	part no.	description	I_N [A]	IP	part no.	description	I_N [A]	IP
380	2630145311	8PM-75-400-100	91	55	002149550	DRIVE-TECH 4.550	118	54	002352490	DV/DT FILTER	90	00
380	2630145311	8PM-75-400-100	112	67	002149550	DRIVE-TECH 4.550	118	54	314005130	DV/DT FILTER	140	00
380	2630145311	8PM-75-400-100	128	75	002149750	DRIVE-TECH 4.750	158	54	314005130	DV/DT FILTER	140	00
380	2630145311	8PM-75-400-100	91	55	002149550	DRIVE-TECH 4.550	118	54	314005124	DV/DT FILTER	140	54
380	2630145311	8PM-75-400-100	112	67	002149550	DRIVE-TECH 4.550	118	54	314005124	DV/DT FILTER	140	54
380	2630145311	8PM-75-400-100	128	75	002149750	DRIVE-TECH 4.750	158	54	314005124	DV/DT FILTER	140	54
380	2630165311	8PM-100-400-100	143	83	002149750	DRIVE-TECH 4.750	158	54	314005130	DV/DT FILTER	140	00
380	2630165311	8PM-100-400-100	162	93	002149900	DRIVE-TECH 4.900	185	54	314005119	DV/DT FILTER	205	00
380	2630165311	8PM-100-400-100	178	100	002151100	DRIVE-TECH 4.1100	215	54	314005119	DV/DT FILTER	205	00
380	2630165311	8PM-100-400-100	143	83	002149750	DRIVE-TECH 4.750	158	54	314005124	DV/DT FILTER	140	54
380	2630165311	8PM-100-400-100	162	93	002149900	DRIVE-TECH 4.900	185	54	314005125	DV/DT FILTER	205	54
380	2630165311	8PM-100-400-100	178	100	002151100	DRIVE-TECH 4.1100	215	54	314005125	DV/DT FILTER	205	54
380	2630185311	8PM-130-400-100	153	93	002149750	DRIVE-TECH 4.750	158	54	314005119	DV/DT FILTER	205	00
380	2630185311	8PM-130-400-100	186	110	002151100	DRIVE-TECH 4.1100	215	54	314005119	DV/DT FILTER	205	00
380	2630185311	8PM-130-400-100	225	130	002151320	DRIVE-TECH 4.1320	268	54	002352533	DV/DT FILTER	330	00
380	2630185311	8PM-130-400-100	153	93	002149750	DRIVE-TECH 4.750	158	54	314005125	DV/DT FILTER	205	54
380	2630185311	8PM-130-400-100	186	110	002151100	DRIVE-TECH 4.1100	215	54	314005125	DV/DT FILTER	205	54
380	2630185311	8PM-130-400-100	225	130	002151320	DRIVE-TECH 4.1320	268	54	314005126	DV/DT FILTER	310	54
380	2630145311	8PM-75-400-100	91	55	002149550	DRIVE-TECH 4.550	118	54	002347012	SINE WAVE FILTER	115	00
380	2630145311	8PM-75-400-100	112	67	002149550	DRIVE-TECH 4.550	118	54	002347012	SINE WAVE FILTER	115	00
380	2630145311	8PM-75-400-100	128	75	002149750	DRIVE-TECH 4.750	158	54	314005121	SINE WAVE FILTER	140	00
380	2630145311	8PM-75-400-100	91	55	002149550	DRIVE-TECH 4.550	118	54	002347020	SINE WAVE FILTER	180	54
380	2630145311	8PM-75-400-100	112	67	002149550	DRIVE-TECH 4.550	118	54	002347020	SINE WAVE FILTER	180	54
380	2630145311	8PM-75-400-100	128	75	002149750	DRIVE-TECH 4.750	158	54	002347020	SINE WAVE FILTER	180	54
380	2630165311	8PM-100-400-100	143	83	002149750	DRIVE-TECH 4.750	158	54	314005121	SINE WAVE FILTER	140	00
380	2630165311	8PM-100-400-100	162	93	002149900	DRIVE-TECH 4.900	185	54	314005122	SINE WAVE FILTER	205	00
380	2630165311	8PM-100-400-100	178	100	002151100	DRIVE-TECH 4.1100	215	54	314005122	SINE WAVE FILTER	205	00
380	2630165311	8PM-100-400-100	143	83	002149750	DRIVE-TECH 4.750	158	54	002347020	SINE WAVE FILTER	180	54
380	2630165311	8PM-100-400-100	162	93	002149900	DRIVE-TECH 4.900	185	54	314005128	SINE WAVE FILTER	205	54
380	2630165311	8PM-100-400-100	178	100	002151100	DRIVE-TECH 4.1100	215	54	314005128	SINE WAVE FILTER	205	54
380	2630185311	8PM-130-400-100	153	93	002149750	DRIVE-TECH 4.750	158	54	314005122	SINE WAVE FILTER	205	00
380	2630185311	8PM-130-400-100	186	110	002151100	DRIVE-TECH 4.1100	215	54	314005122	SINE WAVE FILTER	205	00
380	2630185311	8PM-130-400-100	225	130	002151320	DRIVE-TECH 4.1320	286	54	314005123	SINE WAVE FILTER	310	00
380	2630185311	8PM-130-400-100	153	93	002149750	DRIVE-TECH 4.750	158	54	314005128	SINE WAVE FILTER	205	54
380	2630185311	8PM-130-400-100	186	110	002151100	DRIVE-TECH 4.1100	215	54	314005128	SINE WAVE FILTER	205	54
380	2630185311	8PM-130-400-100	225	130	002151320	DRIVE-TECH 4.1320	268	54	314005129	SINE WAVE FILTER	310	54

* WW- Water well Design (Stator 304SS / Castings - CI Powder coated)
* 316SS Motor version: 263 xxx 6311
* 904L Motor version: 263 xxx 7311

8" REW HIGH EFFICIENCY SYSTEM

HES8 | DRIVE-TECH SOLAR

High Efficiency PM motor					DrivE-Tech Solar				output filter			
V_N [V]	part no. [WW]*	description	I_N [A]	P_N [kW]	part no.	description	I_N [A]	IP	part no.	description	I_N [A]	IP
380	2630145311	8PM-75-400-100	91	55	002149A12	DRIVE-TECH 4.550 SOLAR MP	118	54	002352490	DV/DT FILTER	90	00
380	2630145311	8PM-75-400-100	112	67	002149A12	DRIVE-TECH 4.550 SOLAR MP	118	54	314005130	DV/DT FILTER	140	00
380	2630145311	8PM-75-400-100	128	75	002149A13	DRIVE-TECH 4.750 SOLAR MP	158	54	314005130	DV/DT FILTER	140	00
380	2630145311	8PM-75-400-100	91	55	002149A12	DRIVE-TECH 4.550 SOLAR MP	118	54	314005124	DV/DT FILTER	140	54
380	2630145311	8PM-75-400-100	112	67	002149A12	DRIVE-TECH 4.550 SOLAR MP	118	54	314005124	DV/DT FILTER	140	54
380	2630145311	8PM-75-400-100	128	75	002149A13	DRIVE-TECH 4.750 SOLAR MP	158	54	314005124	DV/DT FILTER	140	54
380	2630165311	8PM-100-400-100	143	83	002149A13	DRIVE-TECH 4.750 SOLAR MP	158	54	314005130	DV/DT FILTER	140	00
380	2630165311	8PM-100-400-100	162	93	002149A14	DRIVE-TECH 4.930 SOLAR MP	198	54	314005119	DV/DT FILTER	205	00
380	2630165311	8PM-100-400-100	178	100	002149A15	DRIVE-TECH 4.1100 SOLAR MP	228	54	314005119	DV/DT FILTER	205	00
380	2630165311	8PM-100-400-100	143	83	002149A13	DRIVE-TECH 4.750 SOLAR MP	158	54	314005124	DV/DT FILTER	140	54
380	2630165311	8PM-100-400-100	162	93	002149A14	DRIVE-TECH 4.930 SOLAR MP	198	54	314005125	DV/DT FILTER	205	54
380	2630165311	8PM-100-400-100	178	100	002149A15	DRIVE-TECH 4.1100 SOLAR MP	228	54	314005125	DV/DT FILTER	205	54
380	2630185311	8PM-130-400-100	153	93	002149A13	DRIVE-TECH 4.750 SOLAR MP	158	54	314005119	DV/DT FILTER	205	00
380	2630185311	8PM-130-400-100	186	110	002149A15	DRIVE-TECH 4.1100 SOLAR MP	228	54	314005119	DV/DT FILTER	205	00
380	2630185311	8PM-130-400-100	225	130	002149A16	DRIVE-TECH 4.1320 SOLAR MP	268	54	002352533	DV/DT FILTER	330	00
380	2630185311	8PM-130-400-100	153	93	002149A13	DRIVE-TECH 4.750 SOLAR MP	158	54	314005125	DV/DT FILTER	205	54
380	2630185311	8PM-130-400-100	186	110	002149A15	DRIVE-TECH 4.1100 SOLAR MP	228	54	314005125	DV/DT FILTER	205	54
380	2630185311	8PM-130-400-100	225	130	002149A16	DRIVE-TECH 4.1320 SOLAR MP	268	54	314005126	DV/DT FILTER	310	54

* WW- Water well Design (Stator 304SS / Castings - CI Powder coated)
* 316SS Motor version: 263 xxx 6311
* 904L Motor version: 263 xxx 7311

10″ REW HIGH EFFICIENCY SYSTEM

Submersible Borehole System with energy savings up to 7 %*

FEATURES & BENEFITS

SUPERIOR EFFICIENCY

- Up to 7 % improved motor efficiency* with excellent partial load behaviour (SKU reduction)*
- One-stop shop and perfectly matching components guarantee first-class performance/efficiency
- Power factor corrected input (No power compensation needed)
- Reduced motor length and weight

INCREASED LIFETIME

- Incorporated Soft start and protection features (increased lifetime, no additonal investment)
- Speed control (Optimum aggregate operation - pump matches system any time)

CONNECTIVITY

- Communication ModBus (RS485 and Ethernet)

FULLY SUPPORTED

- Easy system set-up due to selectable application presets, integrated start-up assistant and mobile app support
- Fully supported by the Technical Support Professionals and Field Service Engineers

SYSTEM SOLUTION

- 10″ rewindable synchronous submersible motor
- Variable frequency drive
- Matching output filter
- Submersible pump (optional)

APPLICATIONS

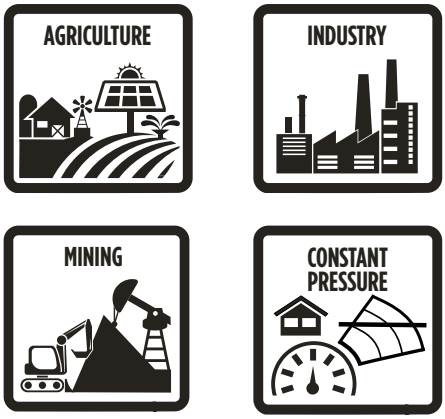

* in comparison to current asynchronous technology

10" REW HIGH EFFICIENCY SYSTEM

- motor range: 190 - 250 kW (100 Hz - 3000 rpm), 230 - 290 kW (120 Hz - 3600 rpm)
- System Power Supply:400 / 460 V ±10 % (50/60 Hz)
- System Supply Frequency: 50 Hz - 60 Hz ±2 %
- Nominal ambient temperature: motor: 30 °C, electronics: 50 °C (> 40 °C with derating)
- Motor installation orientation: vertical / horizontal (shaft end heightened) - 250 kW motors may not be installed horizontally
- MPPT algorithm maximizes system performance
- Protection: motor: IP68, insulation class Y
  drive: IP00
  filter: IP00

OPTIONS

- Special Voltages
- Higher-graded material: 316SS, 904L
- Sinus output filters
- Retrofitable PT 100 temperature sensor

HES10 | X-DRIVE

High Efficiency PM motor					Cerus X-Drive				output filter			
V_N [V]	part no. [WW]*	description	I_N [A]	P_N [kW]	part no.	description	I_N [A]	IP	part no.	description	I_N [A]	IP
380	2640255311	10PM- 150-400-100	199.5	110	CXD-220A-4V-K	X-DRIVE 220A KIT	220	20	314005119	DV/DT FILTER	205	00
380	2640255311	10PM- 150-400-100	236	130	CXD-260A-4V-K	X-DRIVE 260A KIT	260	20	002352533	DV/DT FILTER	330	00
380	2640255311	10PM- 150-400-100	274	150	CXD-310A-4V-K	X-DRIVE 310A KIT	310	20	002352533	DV/DT FILTER	330	00
380	2640255311	10PM- 150-400-100	199.5	110	CXD-220A-4V-K	X-DRIVE 220A KIT	220	20	314005125	DV/DT FILTER	205	54
380	2640255311	10PM- 150-400-100	236	130	CXD-260A-4V-K	X-DRIVE 260A KIT	260	20	314005126	DV/DT FILTER	310	54
380	2640255311	10PM- 150-400-100	274	150	CXD-310A-4V-K	X-DRIVE 310A KIT	310	20	314005126	DV/DT FILTER	310	54
380	2640285311	10PM-200-400-100	284	150	CXD-310A-4V-K	X-DRIVE 310A KIT	310	20	002352533	DV/DT FILTER	330	00
380	2640285311	10PM-200-400-100	354	185	CXD-370A-4V-K	X-DRIVE 370A KIT	370	20	002352550	DV/DT FILTER	500	00
380	2640285311	10PM-200-400-100	389	200	CXD-460A-4V-K	X-DRIVE 460A KIT	460	20	002352550	DV/DT FILTER	500	00
380	2640285311	10PM-200-400-100	284	150	CXD-310A-4V-K	X-DRIVE 310A KIT	310	20	314005126	DV/DT FILTER	310	54
380	2640295311	10PM- 250-400-100	377	200	CXD-460A-4V-K	X-DRIVE 460A KIT	460	20	002352550	DV/DT FILTER	500	00
380	2640295311	10PM- 250-400-100	423	220	CXD-460A-4V-K	X-DRIVE 460A KIT	460	20	002352550	DV/DT FILTER	500	00
380	2640295311	10PM- 250-400-100	497	250	CXD-530A-4V-K	X-DRIVE 530A KIT	530	20	002352550	DV/DT FILTER	500	00
380	2640255311	10PM- 150-400-100	199.5	110	CXD-220A-4V-K	X-DRIVE 220A KIT	220	20	314005122	SINE WAVE FILTER	205	00
380	2640255311	10PM- 150-400-100	236	130	CXD-260A-4V-K	X-DRIVE 260A KIT	260	20	314005123	SINE WAVE FILTER	310	00
380	2640255311	10PM- 150-400-100	274	150	CXD-310A-4V-K	X-DRIVE 310A KIT	310	20	314005123	SINE WAVE FILTER	310	00
380	2640255311	10PM- 150-400-100	199.5	110	CXD-220A-4V-K	X-DRIVE 220A KIT	220	20	314005128	SINE WAVE FILTER	205	54
380	2640255311	10PM- 150-400-100	236	130	CXD-260A-4V-K	X-DRIVE 260A KIT	260	20	314005129	SINE WAVE FILTER	310	54
380	2640255311	10PM- 150-400-100	274	150	CXD-310A-4V-K	X-DRIVE 310A KIT	310	20	314005129	SINE WAVE FILTER	310	54
380	2640285311	10PM-200-400-100	284	150	CXD-310A-4V-K	X-DRIVE 310A KIT	310	20	314005123	SINE WAVE FILTER	310	00
380	2640285311	10PM-200-400-100	354	185	CXD-370A-4V-K	X-DRIVE 370A KIT	370	20	314005168	SINE WAVE FILTER	460	00
380	2640285311	10PM-200-400-100	389	200	CXD-460A-4V-K	X-DRIVE 460A KIT	460	20	314005168	SINE WAVE FILTER	460	00
380	2640285311	10PM-200-400-100	284	150	CXD-310A-4V-K	X-DRIVE 310A KIT	310	20	314005129	SINE WAVE FILTER	310	54
380	2640295311	10PM- 250-400-100	377	200	CXD-460A-4V-K	X-DRIVE 460A KIT	460	20	314005168	SINE WAVE FILTER	460	00
380	2640295311	10PM- 250-400-100	423	220	CXD-460A-4V-K	X-DRIVE 460A KIT	460	20	314005168	SINE WAVE FILTER	460	00
380	2640295311	10PM- 250-400-100	497	250	CXD-530A-4V-K	X-DRIVE 530A KIT	530	20	314005169	SINE WAVE FILTER	590	00

* WW- Water well Design (Stator 304SS / Castings - CI Powder coated)
* 316SS Motor version: 264 xxx 6311
* 904L Motor version: 264 xxx 7311

4" ENCAPSULATED PERMANENT MAGNET MOTOR

STANDARD SPECIFICATION

- 4" NEMA mounting design
- Stainless steel splined shaft
- StatorShield™ - Franklin encapsulation system
- Factory filled with Franklin's FES93 motor fill solution
- Max. storage temperature 0°C - + 50°C
- Liquid lubricated radial bearings and High capacity Kingsbury type thrust bearing for 100 % maintenance free operation
- Field replaceable lead using Franklin's exclusive Water Bloc technology
- Pressure-equalizing diaphragm
- Protection IP68 and insulation class B Frequency of starts: 20 starts/ hour (with min. 3 minutes resting time), equally distributed
- All motors with factory installed leads 1.50 / 2.50 m
- Vertical and horizontal operation, shaftend heightend
- Ratings:
  0.55 - 3.0 kW; Thrust load 4 kN
  3.0 - 7.5 kW; Thrust load 6.5 kN
- Voltage: 220/380 V (100/120 Hz)
- Voltage tolerance U_N: ± 10 %
- Nominal ambient temperature: 30 °C with 0.08 m/s cooling flow

STAINLESS STEEL 304

STAINLESS STEEL 316

3~ 304SS / 316SS MODEL NUMBER 220 V / 100 & 120 HZ

P_N [kW]	U_N [V]	Thrust F [N]	f [Hz]	Digit 1 - 6	Digit 7 - 10	
					Standard 304SS	Standard 316SS
					Single pack with lead*	Single pack with lead*
0.55 - 1.1	220	4000	100	234 071	6721L	6821L
			120	234 051		
1.1 - 2.2	220	4000	100	234 072	6721L	6821L
			120	234 052		
2.2 - 3.0	220	4000	100	234 073	6721L	6821L
			120	234 053		
3.0 - 4.0	220	6500	100	234 074	3421L	3521L
			120	234 054		

3~ 304SS / 316SS MODEL NUMBER 380 V / 100 HZ

P_N [kW]	U_N [V]	Thrust F [N]	f [Hz]	Digit 1 - 6	Digit 7 - 10	
					Standard 304SS	Standard 316SS
					Single pack with lead*	Single pack with lead*
1.1 - 2.2	380	4000	100	234 062	6721L	6821L
2.2 - 3.0	380	4000	100	234 063	6721L	6821L
3.0 - 4.0	380	6500	100	234 064	3421L	3521L
4.0 - 7.5	380	6500	100	234 066	3421L	3521L

* lead lengths motors "L": with pre-mounted cable 1.50 m / 6500N - 2.50 m

4" 3~ ENCAPSULATED PERMANENT MAGNET MOTOR

MOTOR PERFORMANCE DATA 220 V / 100 HZ

Motor model no.	P_N [kW]	Thrust F [N]	U_N [V]	n [min-1]	I_N [A]	I_A/I_N [A]	η [%]	cos phi	T_N [Nm]	T_A/T_N *
234 071 ****	0,55	4000	220	3000	1,8	1	85,1	0,95	1,8	1
	0,75				2,4		85,6	0,97	2,4	
	1,1				3,8		83,5	0,99	3,5	
234 072 ****	1,1	4000	220	3000	3,4	1	86,4	0,96	3,5	1
	1,5				4,8		88,0	0,97	4,8	
	2,2				7,0		87,0	0,99	7,0	
234 073 ****	2,2	4000	220	3000	6,9	1	90,3	0,96	7,0	1
	3,0				9,4		90,2	0,97	9,6	
234 074 ****	3,0	6500	220	3000	10,2	1	90,7	0,94	9,6	1
	3,7				12,0		91,0	0,96	11,8	
	4,0				13,0		91,0	0,97	12,7	

MOTOR PERFORMANCE DATA 220 V / 120 HZ

Motor model no.	P_N [kW]	Thrust F [N]	U_N [V]	n [min-1]	I_N [A]	I_A/I_N [A]	η [%]	cos phi	T_N [Nm]	T_A/T_N *
234 051 ****	0,55	4000	220	3600	2,0	1	85,1	0,95	1,8	1
	0,75				2,6		85,6	0,97	2,4	
	1,1				3,8		83,5	0,99	3,5	
234 052 ****	1,1	4000	220	3600	4,1	1	86,4	0,94	3,5	1
	1,5				5,0		88,0	0,95	4,8	
	2,2				7,1		87,0	0,96	7,0	
234 053 ****	2,2	4000	220	3600	6,9	1	90,3	0,96	7,0	1
	3,0				9,4		90,2	0,97	9,6	
234 054 ****	3,0	6500	220	3600	9,7	1	90,7	0,94	9,6	1
	3,7				11,5		91,0	0,96	11,8	
	4,0				12,5		91,0	0,97	12,7	

MOTOR PERFORMANCE DATA 380 V / 100 HZ

Motor model no.	P_N [kW]	Thrust F [N]	U_N [V]	n [min-1]	I_N [A]	I_A/I_N [A]	η [%]	cos phi	T_N [Nm]	T_A/T_N *
234 062 ****	1,1	4000	380	3000	2,2	1	86.4	0.95	3.5	1
	1.5				2.8		88.0	0.96	4.8	
	2,2				4,0		87.0	0.97	7.0	
234 063 ****	2,2	4000	380	3000	4,0	1	89.6	0.95	7.0	1
	3,0				5.4		90.0	0.97	9.6	
234 064 ****	3,0	6500	380	3000	5.7	1	89.7	0.96	9.6	1
	3.7				6.7		90.2	0.97	11.8	
	4,0				7.3		90.2	0.98	12.7	
234 066 ****	4,0	6500	380	3000	7.3	1	90.7	0.95	12.7	1
	5,5				9.7		91.0	0.95	17,5	
	7,5				13.1		90.5	0.96	23.9	

Performance data are based on measurements with Franklin Electric original equipment.
* Since this is an integrated system (motor plus electronics) these figures relate to VFD input.

6" 3~ ENCAPSULATED PERMANENT MAGNET MOTOR

WATER WELL WW CI PC / 304SS

STAINLESS STEEL 304

STAINLESS STEEL 316

SAND FIGHTER

FEATURES & BENEFITS

- Double-flange NEMA mounting design
- Stainless steel splined shaft
- StatorShield™ - Franklin encapsulation system
- Factory filled with Franklin's FES91 motor fill solution
- Pressure-equalizing diaphragm, spring pre-loaded
- Field replaceable lead using Franklin's exclusive Water Bloc technology
- SandFighter™ sealing system with SiC/SiC mechanical seal and sand slinger
- High efficiency electrical design for low operation costs
- Drinking water approvals

STANDARD SPECIFICATION

- Permanent magnet technology
- Up to 15 points (21 %) improved motor effciency*
- Investment payback of less than two years
- Ratings: 4 - 45 kW, 380 V (100 Hz)
- Thrust load: 15.5 kN: 4 - 22 kW, 27.5 kN: 26 - 45 kW
- Voltage Tolerance U_N: ±10 %
- Nominal speed: 3000 rpm (100 Hz), 3600 rpm (120 Hz)
- Nominal ambient temperature: 30 °C (≤ 22 kW: with 0.16 m/s cooling flow, ≥ 26 kW: with 0.5 m/s cooling flow)
- Protection IP68, Insulation class F
- Standard motors: WW (Water well), stator: 304SS, castings: CI Powder coated
- Frequency of starts: 20 starts/ hour (with min. 3 minutes resting time), equally distributed
- Vertical and horizontal operation, shaftend heightend
- Rotation counter clock wise facing shaft end (rotation reversible)
- All motors with factory installed leads

OPTIONS

- Special Voltages
- Higher-graded material: 316SS
- 45 kN High Thrust version (Standard in 22 kW and 30 kW)
- Retrofitable PT 100 temperature sensor
- HighTemp drop cable

3~ DOL MODEL NUMBER 380 V / 100 HZ

P_N [kW]	U_N [V]	Thrust F [N]	Digit 1 - 6	Digit 7 - 10		
				WW**	304SS	Standard 316SS
				Single pack with pre-installed lead*	Single pack with pre-installed lead*	Single pack with pre-installed lead*
4 - 11	380	15.500	236 080	9561	1461	1561
13 - 22	380	15.500	236 084	9561	1461	1561
26 - 45	380	27.500	236 086	9561	1461	1561

* with 4 m motor short lead
** WW (Water well)- Stator 304SS / Castings - CI Powder coated (see material description in the catalog)

6" 3~ ENCAPSULATED PERMANENT MAGNET MOTOR

3~ MOTOR PERFORMANCE DATA 380 V / 100 HZ

Motor model no.	P_N [kW]	Thrust F [N]	U_N [V]	n [min^{-1}]	I_N [A]	I_A / I_N	η [%]	cos phi	T_N [Nm]	T_A / T_N
236 080 xxxx	4	15500	380	3000	9.2	1	87.1	0.95	12.7	1
	5.5				11.0	1	89.8	0.95	17.5	1
	7.5				14.1	1	90.9	0.95	23.9	1
236 080 xxxx	9.3	15500	380	3000	17.2	1	91.2	0.95	29.6	1
	11				20.5	1	90.9	0.95	35.0	1
236 084 xxxx	13	15500	380	3000	25.3	1	91.4	0.95	41.4	1
	15				28.3	1	91.8	0.95	47.7	1
236 084 xxxx	18.5	15500	380	3000	34.1	1	92.1	0.95	58.9	1
236 084 xxxx	22	15500	380	3000	40.7	1	92.0	0.95	70.0	1
236 086 xxxx	26	27500	380	3000	51.2	1	92.3	0.95	82.8	1
	30				57.8	1	92.5	0.95	95.5	1
236 086 xxxx	37	27500	380	3000	71.3	1	92.1	0.95	117.8	1
236 086 xxxx	45	27500	380	3000	90.0	1	90.8	0.95	143.2	1

8" REWINDABLE PERMANENT MAGNET MOTOR

WATER WELL WW CI PC / 304SS | STAINLESS STEEL 316 | STAINLESS STEEL 904L

SAND FIGHTER

FEATURES & BENEFITS

- Double-flange NEMA mounting design
- High efficiency electrical design for low operation costs
- SandFighter™ sealing system with SiC/SiC mechanical seal and sand slinger
- Factory filled with Franklin's FES93 motor fill solution
- Standard motors WW (Water well) - Stator: 304SS / Castings - CI Powder coated
- Drinking water approvals
- Stainless steel splined shaft
- Liquid lubricated radial bearings and High capacity Kingsbury 45 kN type thrust bearing for 100 % maintenance free operation
- Pressure-equalizing diaphragm, spring pre-loaded

STANDARD SPECIFICATION

- Ratings: 75 / 100 / 130 kW (100 Hz - 3000 rpm, 120 Hz - 3600 rpm)
- Max. storage temperature - 15 °C - +60 °C
- Standard motor with PE2/PA winding insulation
- Nominal ambient temperature: 30 °C with 0.5 m/s cooling flow
- System Supply Voltage: 400 V (100 Hz) / 460 V (120 Hz)
- Voltage Tolerance U_N: ±10 %
- Protection IP68
- Motor protection: DIN 61947-4-1
- Frequency of starts: 10 starts/ hour (with min. 3 minutes resting time), equally distributed
- DOL start
- Motor lead length: 6 m
- Motors installation orientation: Vertical / horizontal (shaft end heightened)
- Rotation counter clock wise facing shaft end (rotation reversible)

OPTIONS

- Higher-graded material: 316SS, 904L
- Special Voltages
- Retrofitable PT 100 temperature sensor
- Special lead lengths

MOTOR MODEL NUMBERS

P_N [kW]	400V / 100 Hz WW * Motor model no.	400V / 100 Hz 316SS Motor model no.	400V / 100 Hz 904L Motormodel no.
75	263 014 5311	263 014 6311	263 014 7311
100	263 016 5311	263 016 6311	263 016 7311
130	263 018 5311	263 018 6311	263 018 7311

* WW (Water well)- Stator 304SS / Castings - CI powder coated (see material description in the catalog)

8" REWINDABLE PERMANENT MAGNET MOTOR

MOTOR PERFORMANCE DATA 400 V / 100 HZ

Motor model no.	P_N [kW]	Thrust F [kN]	n_N [min^{-1}]	I_N [A]	I_A/I_N* [A]	η [%]	cos phi	T_N [Nm]	T_A/T_N* [Nm]
263 014 xxxx	45	45	3000	74	1	93.3	0.96	143	1
	55	45	3000	91	1	93.3	0.96	175	1
	67	45	3000	112	1	93.0	0.96	213	1
	75	45	3000	128	1	92.5	0.96	239	1
263 016 xxxx	75	45	3000	129	1	93.5	0.95	239	1
	83	45	3000	143	1	93.3	0.95	264	1
	93	45	3000	162	1	93.0	0.95	296	1
	100	45	3000	178	1	92.7	0.95	319	1
263 018 xxxx	75	45	3000	125	1	93.8	0.97	239	1
	93	45	3000	153	1	93.7	0.97	296	1
	110	45	3000	186	1	93.3	0.97	350	1
	130	45	3000	225	1	92.6	0.96	414	1

MOTOR PERFORMANCE DATA 500 V / 100 HZ

Motor model no.	P_N [kW]	Thrust F [kN]	n_N [min^{-1}]	I_N [A]	I_A/I_N* [A]	η [%]	cos phi	T_N [Nm]	T_A/T_N* [Nm]
263 024 xxxx	45	45	3000	60	1	93.2	0.95	143	1
	55	45	3000	74	1	93.2	0.95	175	1
	67	45	3000	91	1	93.0	0.95	213	1
	75	45	3000	103	1	92.5	0.95	239	1
263 026 xxxx	75	45	3000	105	1	93.5	0.94	239	1
	83	45	3000	116	1	93.3	0.94	264	1
	93	45	3000	131	1	93.2	0.94	296	1
	100	45	3000	143	1	92.9	0.94	319	1
263 028 xxxx	75	45	3000	102	1	93.8	0.96	239	1
	93	45	3000	124	1	93.7	0.96	296	1
	110	45	3000	151	1	93.3	0.96	350	1
	130	45	3000	183	1	92.6	0.96	414	1

Performance data are based on measurements with Franklin Electric original equipment.
*Since this is an integrated system (motor plus electronics) these figures relate to VFD input.

10" REWINDABLE PERMANENT MAGNET MOTOR

FEATURES & BENEFITS

WATER WELL WW CI PC / 304SS | STAINLESS STEEL 316 | STAINLESS STEEL 904L

SAND FIGHTER

- Double-flange NEMA mounting design
- Factory filled with Franklin's FES93 motor fill solution
- Liquid lubricated radial bearings and High capacity Kingsbury 60 kN type thrust bearing for 100 % maintenance free operation
- Pressure-equalizing diaphragm, spring pre-loaded
- Stainless Steel keyed shaft
- SandFighter™ sealing system with SiC/SiC mechanical seal and sand slinger
- Standard motors WW (Water well) - Stator: 304SS / Castings - CI Powder coated
- High efficiency electrical design for low operation costs
- Drinking water approvals

STANDARD SPECIFICATION

- Motor range: 150 - 250 kW (100 Hz - 3000 rpm), 173 - 287 kW (120 Hz - 3600 rpm)
- Max. storage temperature - 15 °C - +60 °C
- Standard motor with PE2/PA winding insulation
- Nominal ambient temperature: 30 °C with 0.5 m/s cooling flow
- System Supply Voltage: 400 V (100 Hz) / 460 V (120 Hz)
- Voltage Tolerance U_N: ±10 %
- Protection IP68
- Motor protection: DIN 61947-4-1
- Frequency of starts: 10 starts/ hour (with min. 3 minutes resting time), equally distributed
- DOL start
- Motor lead length: 6 m
- Motors installation orientation: Vertical / horizontal (shaft end heightened), 250 kW motors may not be installed horizontally
- Rotation counter clock wise facing shaft end (rotation reversible)
- All motors with factory installed leads

OPTIONS

- Special Voltages
- Higher-graded material: 316SS, 904L
- Retrofitable PT 100 temperature sensor
- Special lead lengths

3~ DOL MODEL NUMBERS 400 V / 100 HZ**

P_N [kW]	U_N [V]	400V / 100 Hz WW * Motor model number	400V / 100 Hz 316SS Motor model number	400V / 100 Hz 904L Motor model number
150	400	264 025 5311	264 025 6311	264 025 7311
200	400	264 028 5311	264 028 6311	264 028 7311
250	400	264 029 5311	264 029 6311	264 029 7311

* WW motor - brackets Cast Iron Powder coated
** PM motors are to be operated by Variable frequency drive (VFD)

10" REWINDABLE PERMANENT MAGNET MOTOR

MOTOR PERFORMANCE DATA 400 V / 100 HZ

motor model no.	P_N [kW]	Thrust F [kN]	n_N [min^{-1}]	I_N [A]	I_A/I_N* [A]	η [%]	cos phi	T_N [Nm]	T_A/T_N* [Nm]
264 025 xxxx	110	60	3000	199,5	1	93,0	0,93	353	1
	130	60	3000	236,1	1	93,0	0,93	415	1
	150	60	3000	274,0	1	93,0	0,93	478	1
264 028 xxxx	150	60	3000	284	1	94.3	0.95	478	1
	185	60	3000	354	1	94.1	0.96	589	1
	200	60	3000	389	1	93.8	0.96	637	1
264 029 xxxx	200	60	3000	377	1	94.5	0.95	637	1
	220	60	3000	423	1	94.3	0.96	701	1
	250	60	3000	497	1	93.8	0.96	796	1

MOTOR PERFORMANCE DATA 460 V / 120 HZ

motor model no.	P_N [kW]	$P_{max.}$ [kW]	Thrust F [kN]	n_N [min^{-1}]	I_{MAX} [A]	I_A/I_{MAX}* [A]	η [%]	cos phi	T_N [Nm]	T_A/T_N* [Nm]
264 025 xxxx	110	127	60	3600	199,5	1	93,0	0,93	353	1
	130	150	60	3600	236,1	1	93,0	0,93	415	1
	150	173	60	3600	274,0	1	93,0	0,93	478	1
264 028 xxxx	150	173	60	3600	284	1	94,3	0,95	478	1
	185	213	60	3600	354	1	94,1	0,96	589	1
	200	230	60	3600	389	1	93,6	0,96	637	1
264 029 xxxx	200	230	60	3600	377	1	94,5	0,95	637	1
	220	253	60	3600	423	1	94,3	0,96	701	1
	250	287	60	3600	497	1	93,6	0,96	796	1

Performance data are based on measurements with Franklin Electric original equipment.
*Since this is an integrated system (motor plus electronics) these figures relate to VFD input.

VARIABLE FREQUENCY DRIVES

Franklin Electric Variable Frequency Drives are designed to work in a wide range of submersible and surface pumping applications. They are offering great flexibilty, state of the art motor protection, energy savings and enhanced pump speed control while remaining easy to use.

The innovative and reliable design allows multi-purpose use across many industries and key applications such as residential constant water pressure, municipal water supply, agriculture and irrigation, dewatering and mining.

DrivE-Tech MINI

IP66 wall mounted /
Pump mounted drive

DrivE-Tech COMPACT

IP66 wall mounted/
Pump mounted drive

DrivE-Tech

IP65/54 wall mounted/
Pump mounted drive

Cerus X-Drive

IP20/00 /
Panel mounted drive

DrivE-Tech Series
0.55 - 130 kW

CERUS X-Drive
4.0 - 250 kW

BROCHURES / CATALOGS

Download our drive catalog for further information on **franklinwater.eu.**

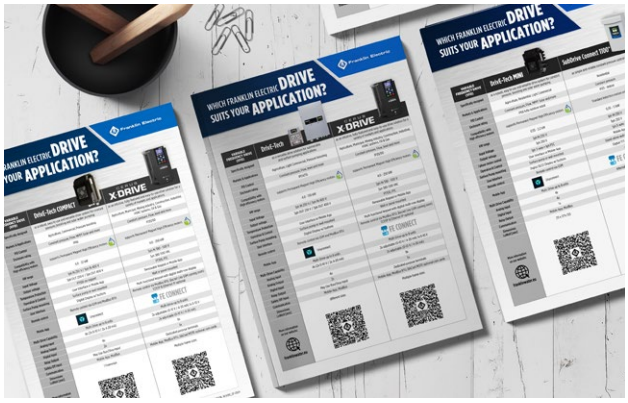

Download our comparison sheets from our website **franklinwater.eu.**

VARIABLE FREQUENCY DRIVES

FEATURES & BENEFITS

The DrivE-Tech and Cerus X-Drive are variable frequency drives designed to control and protect three phase asynchronous and permanent magnet synchronous motors in residential, industrial, municipal, and agricultural applications. They are easy to integrate into existing infrastructure or to be used as stand-alone drive modules for individual pumping applications.

- Enhanced pump speed control
- State of the art motor and pump protection features
- Operation of induction type asynchronous motors and permanent magnet synchronous motors
- Wide performance range up to 250 kW
- Compact, innovative and reliable design
- Bluetooth connectivity and Mobile App control
- Remote Support, commissioning, and support
- CE approved

EASY INSTALLATION & SUPPORT

- Intuitive start-up experience with application-specific parameter pre-sets
- Setup/commissioning through user-friendly Mobile App or keypad
- Copy-paste parameter setup between multiple drives through keypad data storage or Mobile App

Unyconnect App for DrivE-Tech Series:

Google Playstore

Apple App Store

FE CONNECT App for X-Drive Series:

Google Playstore

Apple App Store

VARIABLE FREQUENCY DRIVES

MODEL NUMBER CERUS X-DRIVE

drive model no.	drive type	IP	V_{IN} [V]	I_{OUT} [A]	dimensions				weight [kg]	Frame size
					a	b	c	d		
CXD-013A-4V-K	X-Drive 13A	IP	3x380-500	13	130	250		170	3	A
CXD-018A-4V-K	X-Drive 18A	20	3x380-500	18	130	250		170	3	A
CXD-024A-4V-K	X-Drive 24A	20	3x380-500	24	190	320		190	5.5	B
CXD-032A-4V-K	X-Drive 32A	20	3x380-500	32	190	320		190	5.5	B
CXD-038A-4V-K	X-Drive 38A	20	3x380-500	38	190	320		190	5.5	B
CXD-045A-4V-K	X-Drive 45A	20	3x380-500	45	250	400		210	10	C
CXD-060A-4V-K	X-Drive 60A	20	3x380-500	60	250	400		210	10	C
CXD-073A-4V-K	X-Drive 73A	20	3x380-500	73	250	400		210	10	C
CXD-091A-4V-K	X-Drive 91A	20	3x380-500	91	280	500	614	255	27	D0
CXD-110A-4V-K	X-Drive 110A	20	3x380-500	110	280	500	614	255	27	D0
CXD-150A-4V-K	X-Drive 150A	20	3x380-500	150	330	550	688	275	40	D
CXD-180A-4V-K	X-Drive 180A	20	3x380-500	180	330	550	688	275	40	D
CXD-220A-4V-K	X-Drive 220A	20	3x380-500	220	370	589	716	300	65	E
CXD-260A-4V-K	X-Drive 260A	20	3x380-500	260	370	589	716	300	65	E
CXD-310A-4V-K	X-Drive 310A	20	3x380-500	310	420	800	940	300	87	F
CXD-370A-4V-K	X-Drive 370A	20	3x380-500	370	420	800	940	300	87	F
CXD-460A-4V-K	X-Drive 460A	20	3x380-500	460	500	1000	1240	397	135	G
CXD-530A-4V-K	X-Drive 530A	20	3x380-500	530	500	1000	1240	397	135	G

* Optional input filter on request (X-Drive 13A - 73A)

MODEL NUMBER DRIVE-TECH MINI

Drive model no.	drive type	IP	V_{IN} [V]	I_{OUT} [A]	dimensions [mm]	weight [kg]
002149005	DT MINI 2.005 M/T	66	1x220-240	3	150 x 211 x 130	2.5
002149112	DT MINI 2.011 M/T	66	1x220-240	5	150 x 211 x 130	2.5
002149152	DT MINI 2.015 M/T	66	1x220-240	7.5	150 x 211 x 130	2.5
314000170	DT MINI 2.022 M/T	66	1x220-240	8.5	150 x 211 x 130	2.5
314000162	DT MINI 4.011 T/T	66	3x380-460	4	150 x 211 x 130	2.5
314000163	DT MINI 4.022 T/T	66	3x380-460	6	150 x 211 x 130	2.5
314000164	DT MINI 4.040 T/T	66	3x380-460	10.5	150 x 211 x 130	2.5

drive model no.	drive type	IP	V_{IN} [V]	VDC_{IN} [V]	I_{OUT} [A]	dimensions [mm]	weight [kg]
314000165	DT MINI Solar 2.005 M/T	66	1x220-240	400	3	150 x 211 x 130	2.5
314000166	DT MINI Solar 2.011 M/T	66	1x220-240	400	5	150 x 211 x 130	2.5
314000167	DT MINI Solar 2.015 M/T	66	1x220-240	400	7.5	150 x 211 x 130	2.5

VARIABLE FREQUENCY DRIVES

MODEL NUMBER DRIVE-TECH COMPACT

drive model no.	drive model no. PT100	drive type	IP	V_{IN} [V]	I_{OUT} [A]	dimensions [mm]	weight [kg]
002152090	002152092	DT COMPACT 2.022 M/T	66	1x220-240	9.5	248 x 337 x 190	10
002152120	002152122	DT COMPACT 2.030 M/T	66	1x220-240	12.5	248 x 337 x 190	10
002152180	002152182	DT COMPACT 2.040 M/T	66	1x220-240	18.5	248 x 337 x 190	10
002150140	002150142	DT COMPACT 4.055 T/T	66	3x380-460	14	248 x 337 x 190	10
002150180	002150182	DT COMPACT 4.075 T/T	66	3x380-460	18	248 x 337 x 190	10
002150250	002150252	DT COMPACT 4.110 T/T	66	3x380-460	25	248 x 337 x 190	10
002150300	002150302	DT COMPACT 4.150 T/T	66	3x380-460	30	248 x 337 x 190	10
002150380	002150382	DT COMPACT 4.185 T/T	66	3x380-460	38	248 x 337 x 190	10
002150440	002150442	DT COMPACT 4.220 T/T	66	3x380-460	44	248 x 337 x 190	10

MODEL NUMBER DRIVE-TECH COMPACT SOLAR MP

drive model no.	drive type	IP	V_{IN} [V]	I_{OUT} [A]	dimensions [mm]	weight [kg]
002150141	DT COMPACT Solar 4.055 T/T	66	3x380-460	14	248 x 337 x 190	10
002150181	DT COMPACT Solar 4.075 T/T	66	3x380-460	18	248 x 337 x 190	10
002150251	DT COMPACT Solar 4.110 T/T	66	3x380-460	25	248 x 337 x 190	10
002150301	DT COMPACT Solar 4.150 T/T	66	3x380-460	30	248 x 337 x 190	10
002150381	DT COMPACT Solar 4.185 T/T	66	3x380-460	38	248 x 337 x 190	10
002150441	DT COMPACT Solar 4.220 T/T	66	3x380-460	44	248 x 337 x 190	10

MODEL NUMBER DRIVE-TECH

drive model no.	drive type	IP	V_{IN} [V]	I_{OUT} [A]	dimensions [mm]	weight [kg]	Frame size
002149115	DRIVE-TECH 2.015 M/T 7A - M/M 9A	65	1x220-240	7	180 x 180 x 205	5	1
002149131	DRIVE-TECH 2.030 M/T 11A - M/M9A	65	1x220-240	11	180 x 180 x 205	5	1
002149185	DRIVE-TECH 4.185 T/T 38A	54	3x380-460	38	410 x 680 x 260	40	3
002149220	DRIVE-TECH 4.220 T/T 48A	54	3x380-460	48	410 x 680 x 260	40	3
002149300	DRIVE-TECH 4.300 T/T 65A	54	3x380-460	65	410 x 680 x 260	40	3
002149370	DRIVE-TECH 4.370 T/T 75A	54	3x380-460	75	410 x 680 x 260	40	3
002149450	DRIVE-TECH 4.450 T/T 85A	54	3x380-460	85	410 x 680 x 260	40	3
002149550	DRIVE-TECH 4.550 T/T 118A	54	3x380-460	118	490 x 880 x 380	80	4
002149750	DRIVE-TECH 4.750 T/T 158A	54	3x380-460	158	490 x 880 x 380	80	4
002149900	DRIVE-TECH 4.900 T/T 185A	54	3x380-460	185	490 x 880 x 380	80	4
002151100	DRIVE-TECH 4.1100 T/T 215A	54	3x380-460	215	490 x 880 x 380	80	4
002151320	DRIVE-TECH 4.1320 T/T 268A	54	3x380-460	268	490 x 880 x 380	80	4

OUTPUT FILTER

- A VFD output filter or load reactor acts as an additional impedance between VFD and motor. It protects the motor winding and reduces the voltage stress by decreasing the voltage rise time (dV/dt) and tampering the output voltage waveform of the VFD. Optimizing the VFD output voltage waveform into a more suitable profile prevents the risk of high voltage reflexion caused by long motor cable length.
- Required when using 3x400 V AC induction and permanent magnet motors with VFD
- Use dV/dt output filter for motor cable lengths of 4 - 120 m.
- Use Sinus output filter for motor cable lengths greater than 120 m.
- The size of a dV/dt or Sinus filter must be selected according to the nominal motor current [A]

Sinus output filter

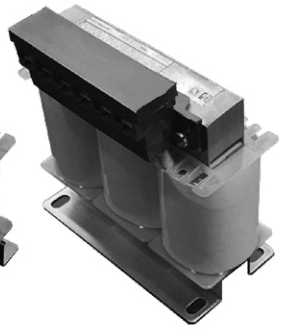

dv/dt output filter

FEATURES & BENEFITS

- For use with 3x400 V AC induction and permanent magnet motors
- Protects motor winding against high voltage peaks and increases lifetime
- Reduces motor noise
- Improves EMC and reduces emissions

DV/DT OUTPUT FILTER

MODEL NO. DV/DT OUTPUT FILTER IP00

filter model no.	Type	IP	$V_{NOMINAL}$ [V]	$I_{NOMINAL}$ [A]	fs [kHz]	Dimensions a x b x c [mm]	**Mounting**	weight [kg]
002352414	dV/dt	00	380 - 460	14	4	120 x 67 x 115	wall / floor	2.7
002352432	dV/dt	00	380 - 460	32	4	140 x 75 x 150	wall / floor	3.5
002352490	dV/dt	00	380 - 460	90	4	180 x 120 x 200	wall / floor	8
314005102	dV/dt	00	380 - 460	38	4	155 x 96 x 197	wall / floor	5
314005137	dV/dt	00	380 - 460	105	4	190 x 116 x 238	wall / floor	12
314005130	dV/dt	00	380 - 460	140	4	240 x 139 x 335	wall / floor	14
314005119	dV/dt	00	380 - 460	205	4	240 x 149 x 335	wall / floor	19
002352533	dV/dt	00	380 - 460	330	4	240 x 162 x 208	wall / floor	32
002352550	dV/dt	00	380 - 460	500	4	240 x 171 x 268	floor	35
314005167	dV/dt	00	380 - 460	650	4	300 x 260 x 347	floor	50

* Mountable filter (optional filter box available)

MODEL NO. DV/DT OUTPUT FILTER IP54

filter model no.	type	IP	$V_{NOMINAL}$ [V]	$I_{NOMINAL}$ [A]	fs [kHz]	Dimensions a x b x c [mm]	**Mounting**	weight [kg]
*002352414	dV/dt	54	380 - 460	14	4	164 x 196 x 141	wall	4.2
*002352432	dV/dt	54	380 - 460	32	4	164 x 196 x 141	wall	5
*002352490	dV/dt	54	380 - 460	45	4	264 x 339 x 211	wall	11.5
314005112	dV/dt	54	380 - 460	61	4	325 x 354 x 227	wall	24
314005118	dV/dt	54	380 - 460	87	4	405 x 654 x 227	wall	37
314005124	dV/dt	54	380 - 460	140	4	550 x 560 x 550	floor	52
314005125	dV/dt	54	380 - 460	205	4	550 x 560 x 550	floor	62
314005126	dV/dt	54	380 - 460	310	4	550 x 560 x 550	floor	81

* Mountable filter (optional filter box available)

			IP23		IP54	
			Box Size		Box Size	
			1	2	1	2
filter type	[A]	part no.	002150FB0	002150FB1	002150FB2	002150FB3
dV/dt	14	002352414	✓	✓	✓	✓
	32	002352432	✓	✓	50% Amp. derating	✓
	90	002352490	x	✓	x	50% Amp. derating

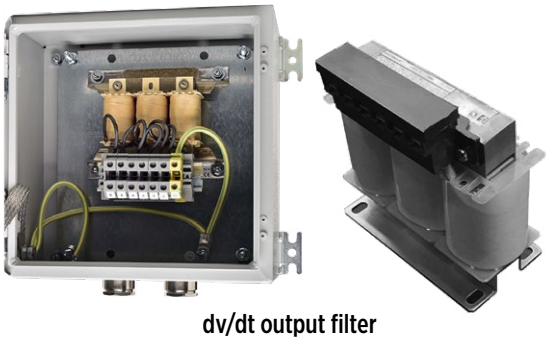

dv/dt output filter

PLUG-IN OUTPUT FILTER CARD

drive type	Kit PN	
DrivE-Tech COMPACT DTC plug-In dV/dt filter card 32A DTC 4.055 - 4.150	002150FC0	

SINUS OUTPUT FILTER

MODEL NO. SINUS OUTPUT FILTER IP00

filter model no.	type	IP	$V_{NOMINAL}$ [V]	$I_{NOMINAL}$ [A]	fs [kHz]	Dimensions a x b x c [mm]	**Mounting**	weight [kg]
002347013	Sinus	00	380 - 460	14	4	180 x 105 x 210	wall / floor	10
002347011	Sinus	00	380 - 460	32	4	240 x 115 x 280	wall / floor	17.5
002347012	Sinus	00	380 - 460	115	4	300 x 150 x 285	floor	42
314005121	Sinus	00	380 - 460	140	4	360 x 311 x 413	floor	87
314005122	Sinus	00	380 - 460	205	4	420 x 335 x 460	floor	105
314005171	Sinus	00	380 - 460	261	4	420 x 335 x 460	floor	125
314005123	Sinus	00	380 - 460	310	2.5	420 x 365 x 460	floor	140
314005168	Sinus	00	380 - 460	460	2.5	480 x 460 x 523	floor	190
314005169	Sinus	00	380 - 460	590	2.5	480 x 490 x 523	floor	225

* Mountable filter (optional filter box available)

MODEL NO. SINUS OUTPUT FILTER IP54

filter model no.	type	IP	$V_{NOMINAL}$ [V]	$I_{NOMINAL}$ [A]	fs [kHz]	Dimensions a x b x c [mm]	**Mounting**	weight [kg]
*002347013	Sinus	54	380 - 460	14	4	264 x 339 x 211	wall	13.5
*002347011	Sinus	54	380 - 460	32	4	264 x 339 x 211	wall	21
314005115	Sinus	54	380 - 460	38	4	770 x 610 x 620	floor	76
314005139	Sinus	54	380 - 460	46	4	770 x 610 x 620	floor	90
314005116	Sinus	54	380 - 460	72	4	770 x 610 x 620	floor	112
002347020	Sinus	54	380 - 460	180	4	600 x 400 x 800	floor	167
314005131	Sinus	54	380 - 460	170	4	770 x 610 x 620	floor	166
314005128	Sinus	54	380 - 460	205	4	1150 x 920 x 890	floor	303
314005170	Sinus	54	380 - 460	261	2.5	1150 x 920 x 890	floor	434
314005129	Sinus	54	380 - 460	310	2.5	1150 x 920 x 890	floor	429

* Mountable filter (optional filter box available)

			IP23		IP54	
			Box Size		Box Size	
			1	2	1	2
filter type	[A]	part no.	002150FB0	002150FB1	002150FB2	002150FB3
Sinus	14	002347013	x	✓	x	✓
	32	002347011	x	✓	x	✓
	-	-	-	-	-	-

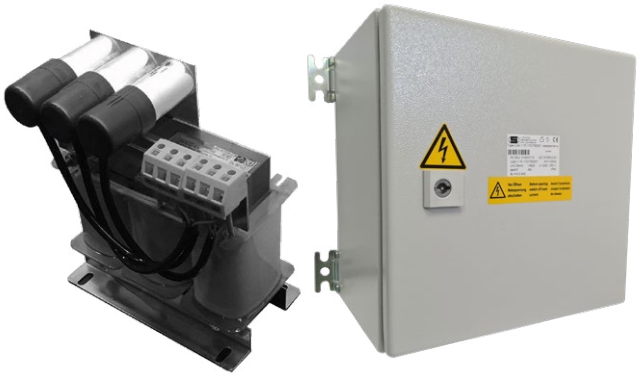

Sinus output filter

OUTPUT FILTER ACCESSORIES

FILTER HOUSING

- Optional output filter boxes can be used in combination with dedicated output filter models to increase the IP enclosure rating and protect the output filter when installed outside of a control panel.
- Please refer to the below table to select the correct output filter box. Due to the thermal characteristics and heat dissipation of an output filter it is required to apply a 50% output filter current [A] derating when IP 54 rated filter boxes are used.
- Example: Installing the 32A dV/dt output filter model (002352432) in the IP54 rated filter box (box size 1) will limit the max. output filter current to 50% = 16A max. output filter current.

			IP23		IP54	
			Box Size		Box Size	
			1	2	1	2
filter type	[A]	part no.	002150FB0	002150FB1	002150FB2	002150FB3
dV/dt	14	002352414	✓	✓	✓	✓
	32	002352432	✓	✓	50% Amp. derating	✓
	90	002352490	x	✓	x	50% Amp. derating
Sinus	14	002347013	x	✓	x	✓
	32	002347011	x	✓	x	✓
	-	-	-	-	-	-

DIMENSIONS

Box Size	part no.	Dimensions [mm]				
		L	H	M	O	I
1	002150FB0	196	164	141	29	100
1	002150FB2	196	164	141	29	100
2	002150FB1	339	264	211	30	170
2	002150FB3	339	264	211	30	170

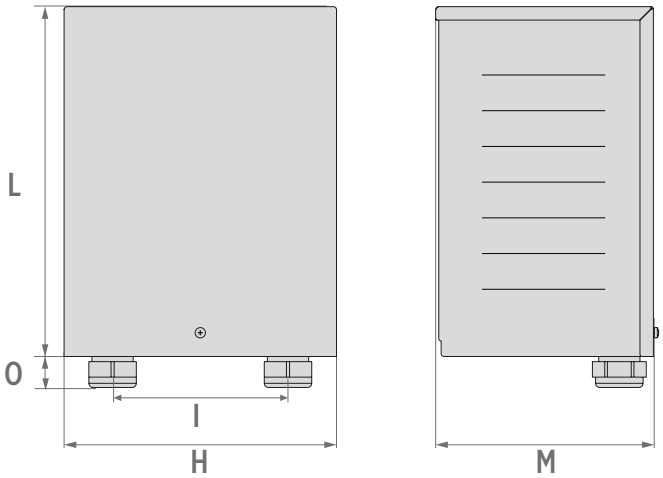

VARIABLE FREQUENCY DRIVE ACCESSORIES

PRESSURE TRANSDUCER

Transducer part no.	Type	Range	Signal [mA]	Material	
002851075	Pressure sensor without cable	0-10 Bar	4-20	A304	
002851080	Pressure sensor without cable	0-16 Bar	4-20	A304	
002851085	Pressure sensor without cable	0-25 Bar	4-20	A304	
002851076	Pressure sensor with 2m cable	0-6 Bar	4-20	A304	
002851081	Pressure sensor with 2m cable	0-10 Bar	4-20	A304	
002852211	Pressure sensor with 2m cable	0-16 Bar	4-20	A304	

MOTOR AND WALL MOUNTING KITS

DrivE-Tech

Type	Kit PN	
Motor Mounting Kit for DrivE-Tech 2.015, 2.030, 4.022, 4.040 ▪ Screws and connectors ▪ Motor mounting frames	14211110	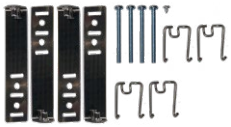
Wall installation kit for 2.015, 2.030, 4.022, 4.040 ▪ Fan with protective grid ▪ Screws ▪ Wall mounting plate	14211121	
Wall installation kit for DT 4.055 - 4.150 ▪ Fan 2x ▪ Screws ▪ Wall mounting frames ▪ cover plate	14211030	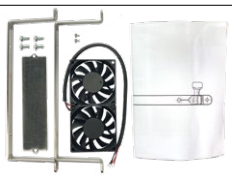

DrivE-Tech COMPACT

Type	Kit PN	
Wall installation kit for DT Compact 2.022 - 4.221 ▪ Screws and connectors ▪ Wall mounting plate	002150WK0	

QUICK SETUP ACCESSORY KIT

DrivE-Tech MINI

part no.	Type	
002150AP0	Wall mounting plate 1.50 m SCHUKO supply cable FASTON cable connectors	

VARIABLE FREQUENCY DRIVE ACCESSORIES

PLUG-IN OUTPUT FILTER CARD

DrivE-Tech COMPACT

Kit part no.	Type	
002150FC0	DTC plug-In dV/dt filter card 32A DTC 4.055 - 4.150	

DRIVE-TECH ACCESSORIES

DrivE-Tech

part no.	Type	
3080640110	KIT IOT WIFI DRIVE-TECH ▪ Remote control / monitoring via WIFI ▪ 32 GB SD storage card ▪ High-performance antenna	
3080600110	KIT IOT GSM DRIVE-TECH ▪ Remote control / monitoring vis GSM ▪ 32 GB SD storage card ▪ High-performance antenna ▪ SIM card <u>not</u> included	

X-DRIVE ZUBEHÖR

Cerus X-Drive

part no.	Type	
10000004840	Bluetooth communications card for X-Drive	
CXD-KPD	X-Drive replacement keypad	
CMC-EIP01	Modbus TCP / Ethernet Card	
MKC-KPPK	X-Drive control panel door mounting kit	

RELATED VIDEOS ON OUR YOUTUBE CHANNEL:

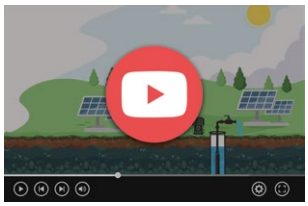

Explainer video
High Efficiency System

Energy savings with
High Efficiency System

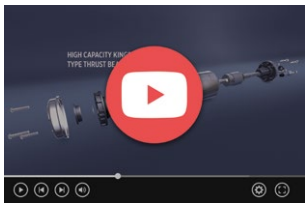

4" High Efficiency System

X-Drive
Variable Frequency Converter

RELATED CATALOGS:

Variable Frequency drives
& Accessories

Submersible motors
& Accessories

Download our Quick set-up guide from our website franklinwater.eu to perform the installation step by step via mobile App:

CATALOG REVISION CHANGE NOTES

Nr.	Changes Rev.42 to Rev.43	Page
1	update motor product description 4“/6”/8“ CT standard motors VFD operation up to 400V - 6”/8“/10”/12” REW motors up to 460V	
2	update HES System Solution Section (complete)	209 - 227
3		
4		
5		
6		
7		
8		
9		
10		
11		
12		
13		
14		
15		
16		
17		

NOTES

Franklin Electric

franklinwater.eu

Franklin Electric Europa GmbH
Rudolf-Diesel-Str. 20 - 54516 Wittlich
DEUTSCHLAND
Telefon: +49 (0) 6571 - 105-0
Fax: +49 (0) 6571 - 105-510
Email: info@franklin-electric.de

Franklin Electric S.r.l.
Via Asolo, 7 - 36031 Dueville (Vicenza)
ITALIEN
Telefon: +39 0444 361114
Fax: +39 0444 365247
Email: sales.it@fele.com

Doc. Nb.: 308-018-626_EN_Rev.43_02-2025